生醫量測系統設計
(9920ET5610701)
Design of Biomedical Measurement Systems

Amplifiers and signal processing

Instructor:林淵翔

Office:IB702-1

Tel:27303618

Email:linyh@mail.ntust.edu.tw

The content of this ppt is referred to Medical Instrumentation Application and Design (Hardcover) by John G. Webster, Fourth Edition

Ideal OPA

- A = ∞ (gain is infinity)
- $v_o = 0$, when $v_1 = v_2$ (no offset voltage)
- $R_d = \infty$ (input impedance is infinity)
- Ro = 0 (output impedance is zero)
- Bandwidth = ∞ (no frequency-response limitations) and no phase shift

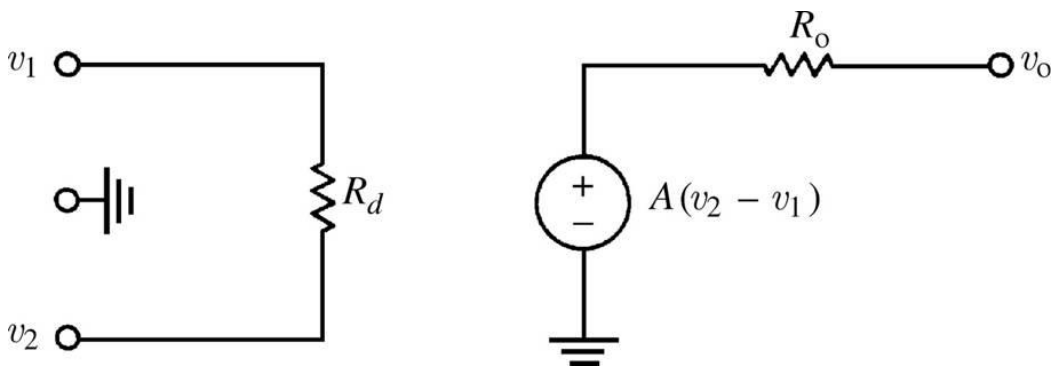

Two basic rules

- Rule 1
  - When the op-amp output is in its linear range, the two input terminals are at the same voltage.
- Rule 2
  - No current flows into either input terminal of the op amp

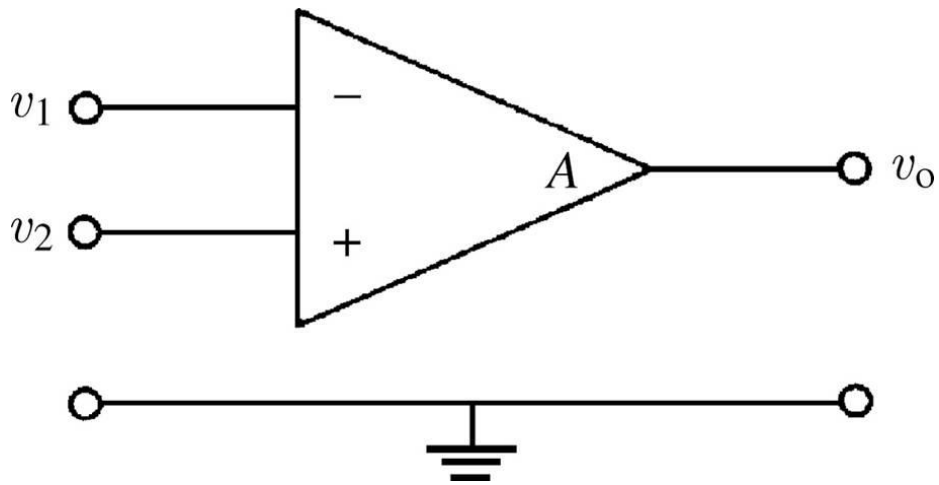

Inverting amplifiers

Virtual ground

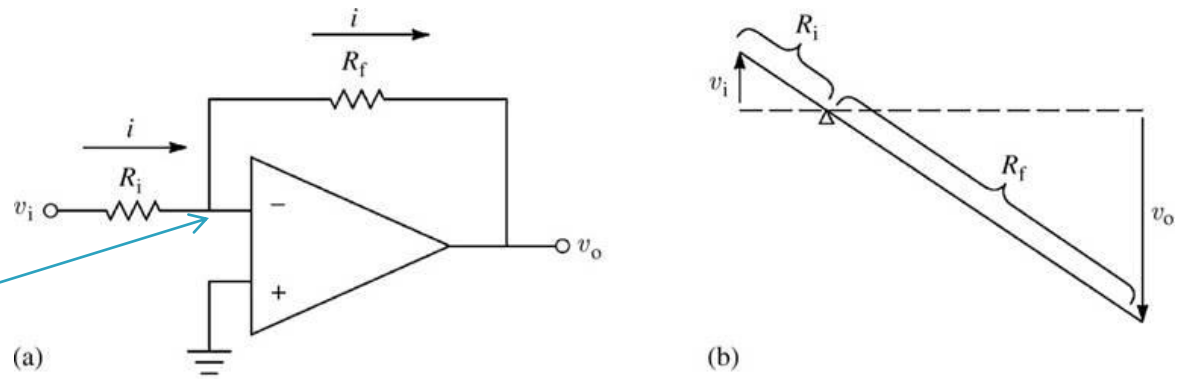

$$v_o = -iR_f = -v_i \frac{R_f}{R_i} \quad \text{or} \quad \frac{v_o}{v_i} = \frac{-R_f}{R_i}$$

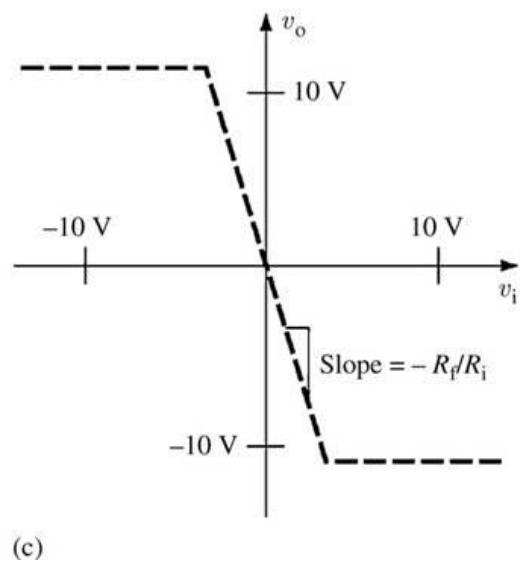

Summing amplifier

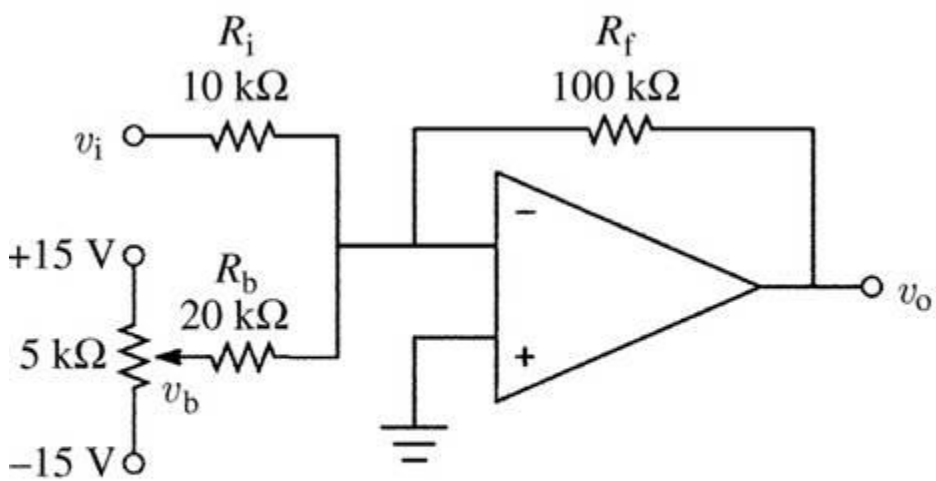

(a)

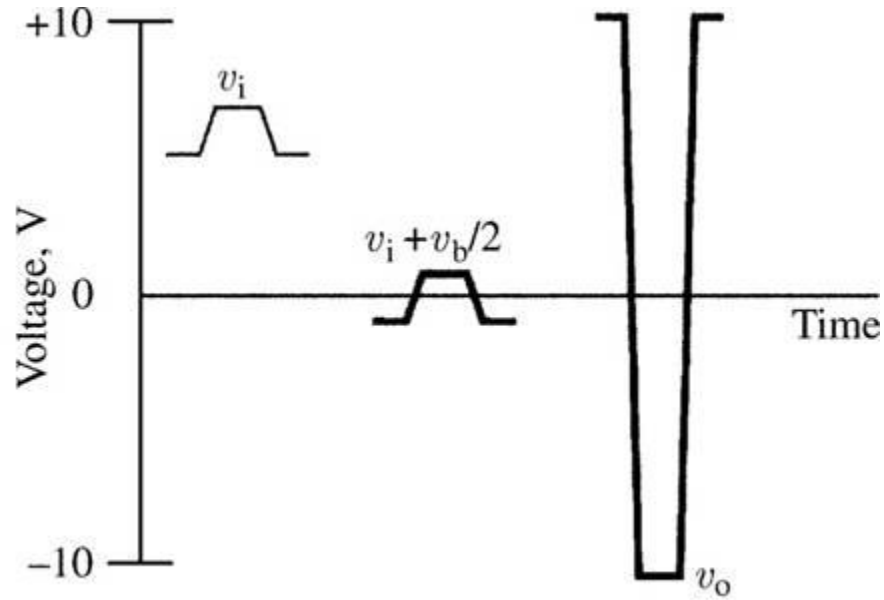

(b)

$$v_o = -R_f\left(\frac{v_i}{R_i} + \frac{v_b}{R_b}\right)$$

$$v_o = -10^5\left(\frac{v_i}{10^4} + \frac{v_b}{2 \times 10^4}\right)$$

$$v_o = -10\left(v_i + \frac{v_b}{2}\right)$$

Noninverting amplifiers

- Follower: vo = vi

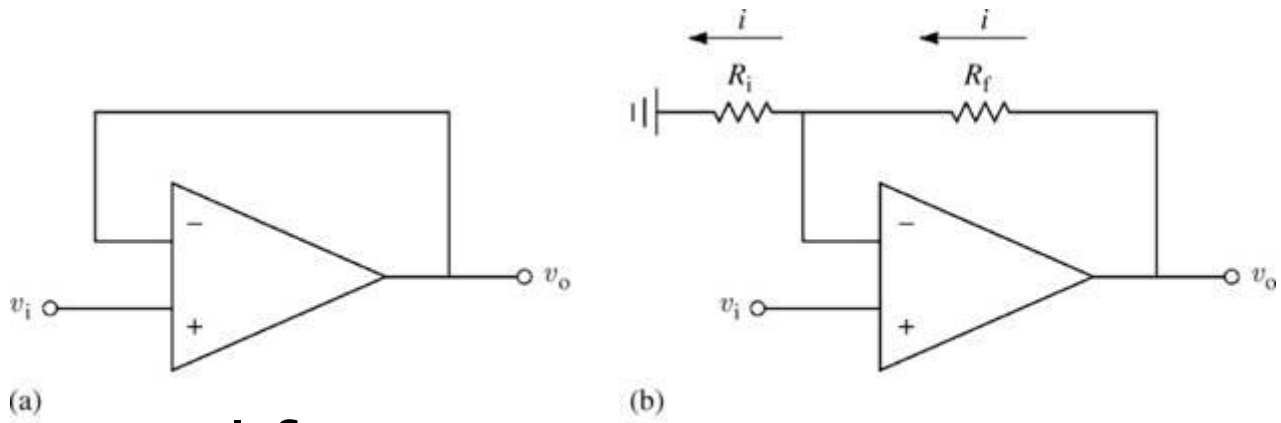

- Noninverting amplifier

$$\frac{v_o}{v_i} = \frac{i(R_f + R_i)}{iR_i} = \frac{R_f + R_i}{R_i}$$

=1+Rf/Ri

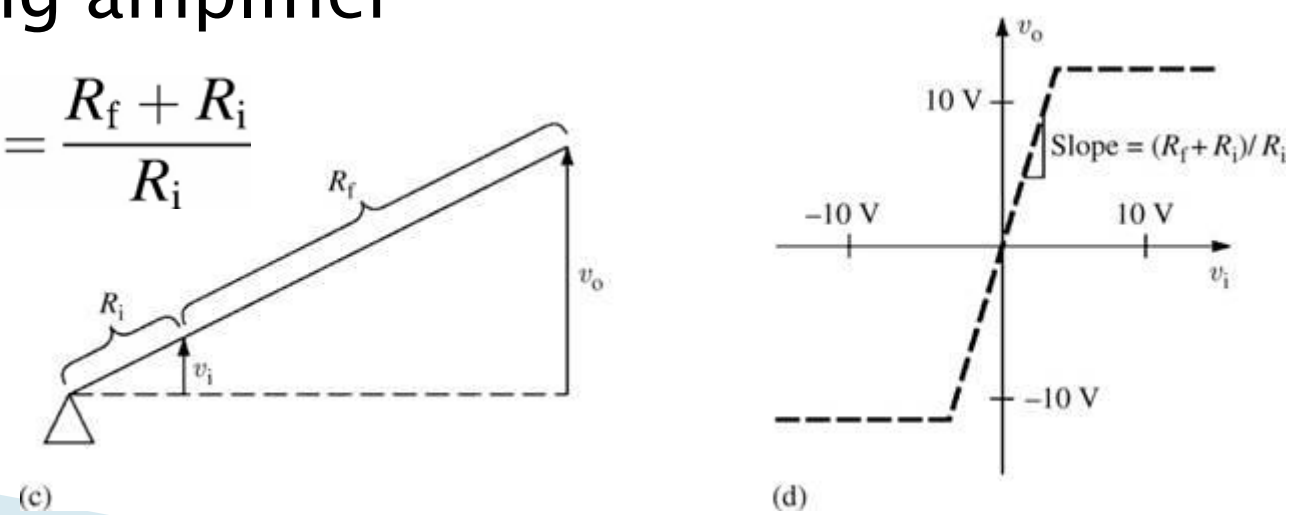

Differential amplifiers

$$v_5 = \frac{v_4 R_4}{R_3 + R_4}$$

$$i = \frac{v_3 - v_5}{R_3} = \frac{v_5 - v_o}{R_4}$$

Vo = V5 – (V3-V5)R4/R3

= V5(1+R4/R3) – V3R4/R3

$$v_o = \frac{(v_4 - v_3)R_4}{R_3}$$

Rin = 2R3

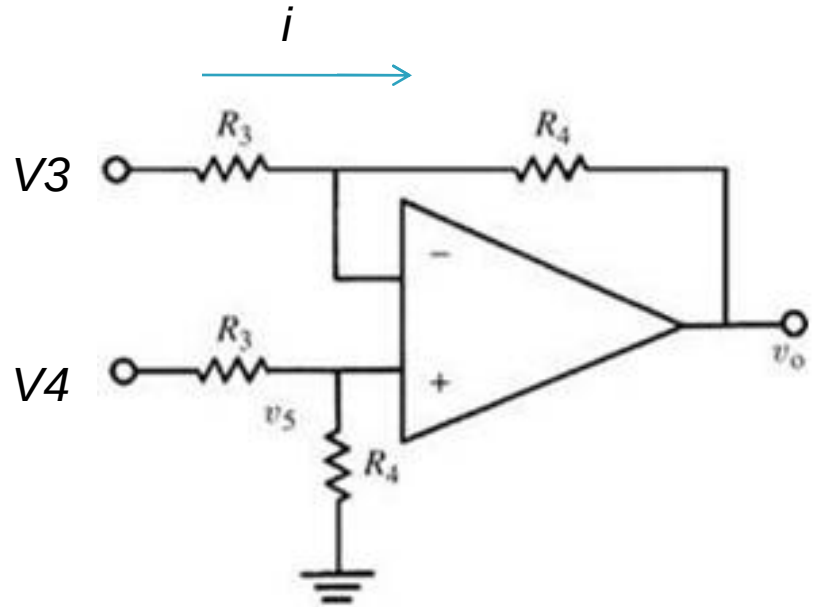

Drawbacks:

- Low input resistance
- Gain can not easy varied

Instrumentation amplifier

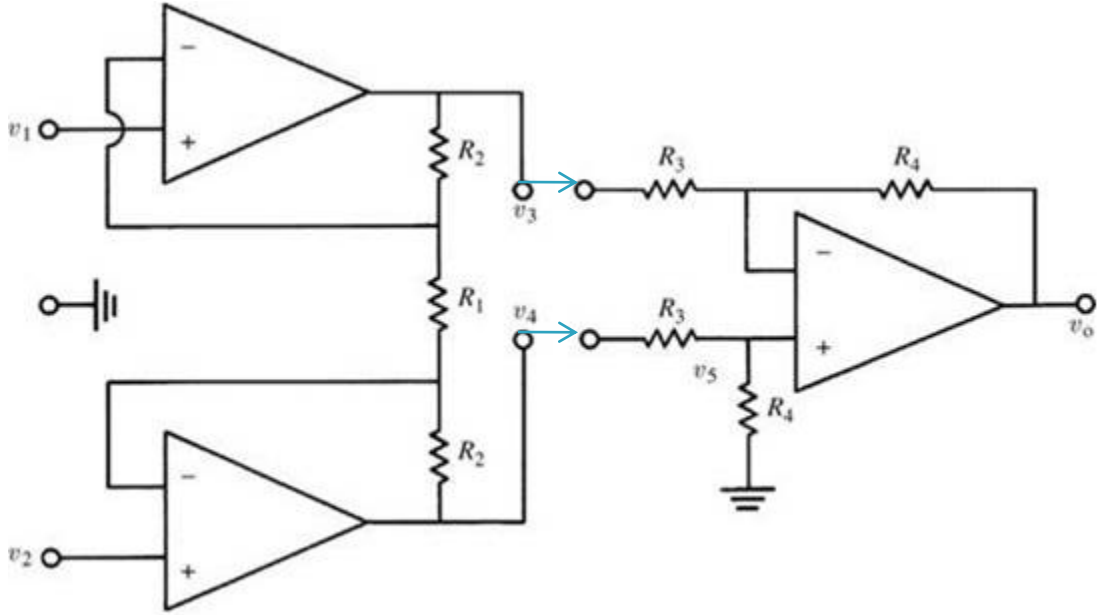

$$G_d = \frac{v_3 - v_4}{v_1 - v_2} = \frac{2R_2 + R_1}{R_1}$$

Vo = (V2-V1)(1 +2R2/R1)R4/R3

$$\text{CMRR} = \frac{G_d}{G_c}$$

- High input resistance
- High CMRR
- Gain can easy varied by R1

Comparators

- Simple and with hysteresis

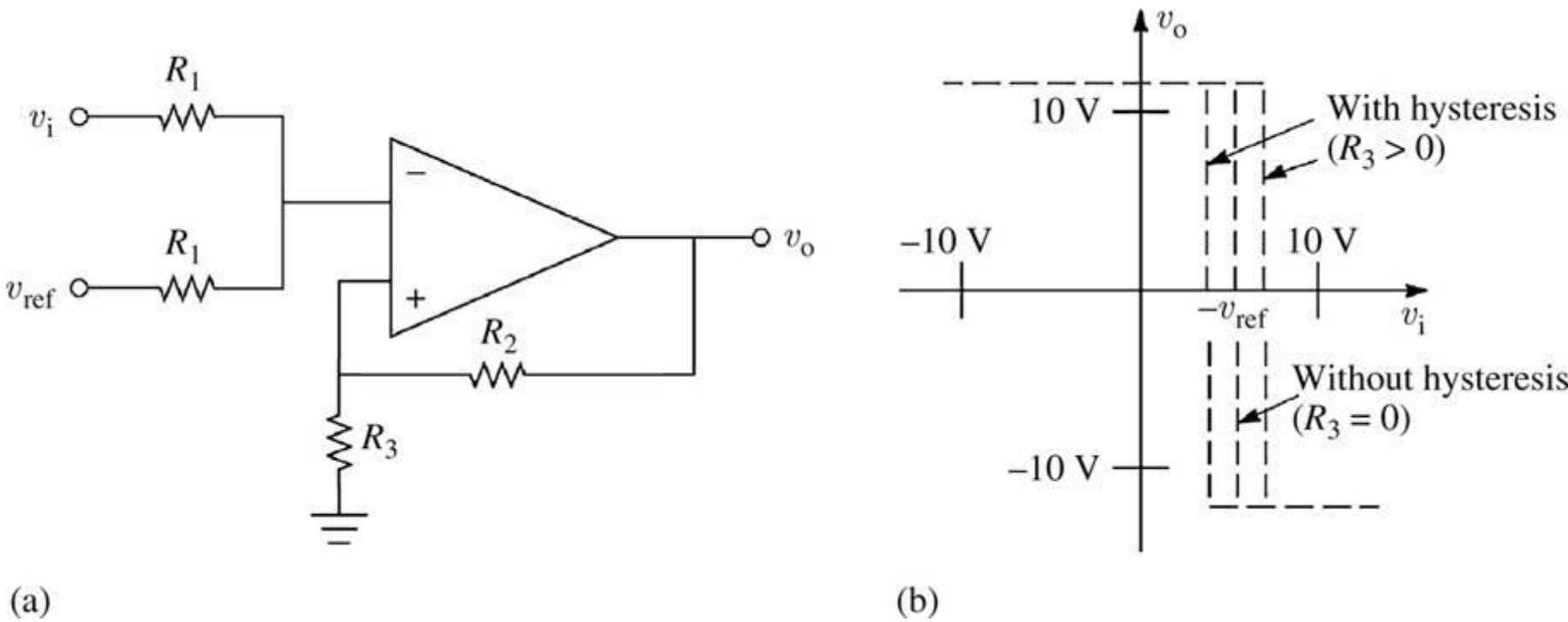

Rectifiers

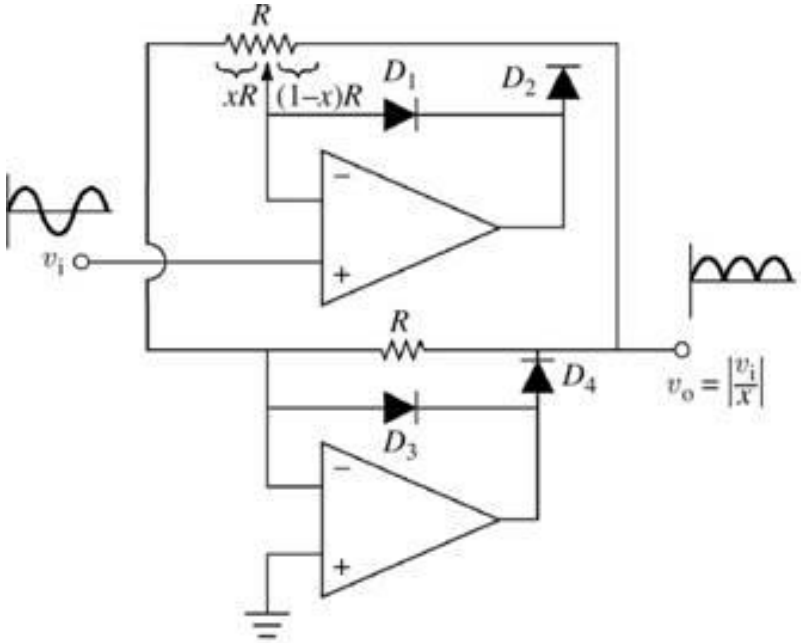

(a)

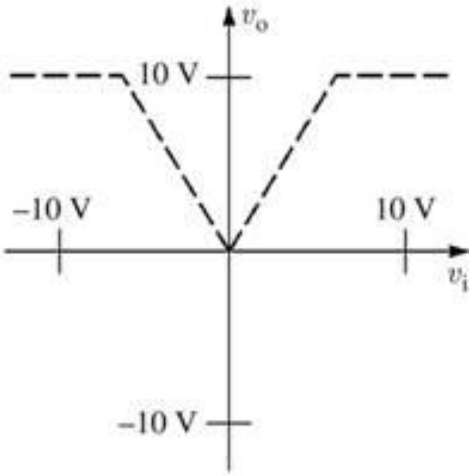

(b)

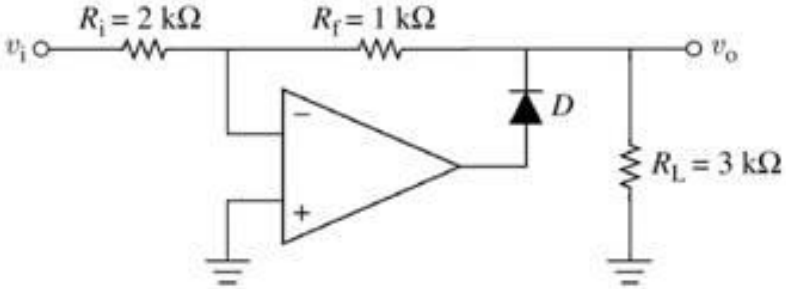

(c)

Integrators

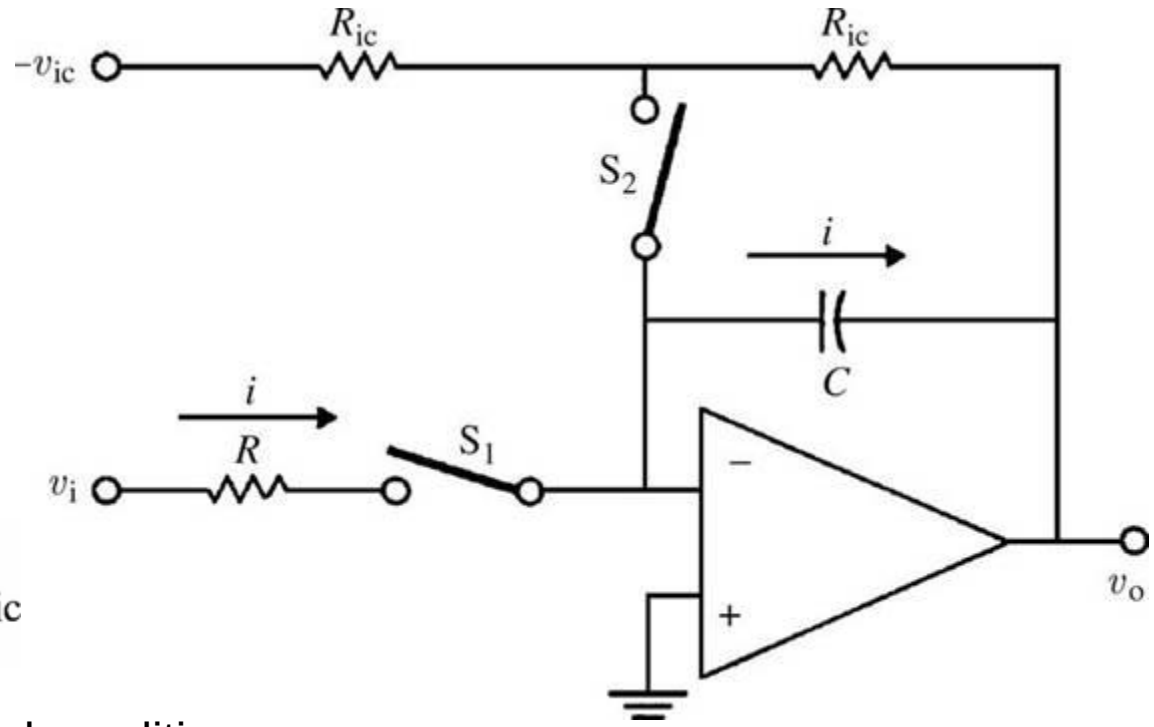

When S1 closed, S2 open

$$v = \frac{1}{C}\int_0^{t_1} i dt$$

$$v_o = -\frac{1}{RC}\int_0^{t_1} v_i dt + v_{ic}$$

Vic is the voltage due to initial condition

Frequency response:

$$\frac{V_o(j\omega)}{V_i(j\omega)} = \frac{Z_f}{Z_i} = -\frac{1/j\omega C}{R}$$

$$= -\frac{1}{j\omega RC} = -\frac{1}{j\omega\tau}$$

Differentiators

$$i = C\frac{dv}{dt}$$

$$v_o = -RC\frac{dv_i}{dt}$$

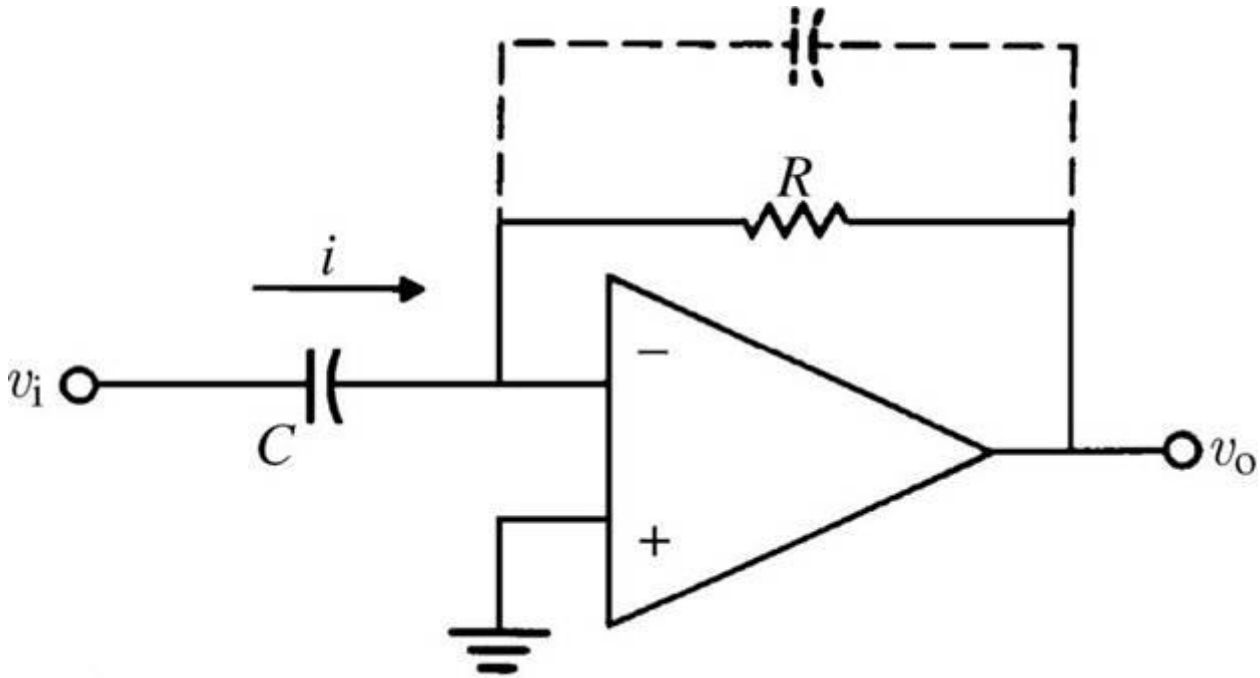

Frequency response:

$$\frac{V_o(j\omega)}{V_i(j\omega)} = -\frac{Z_f}{Z_i} = -\frac{R}{1/j\omega C}$$

$$= -j\omega RC = -j\omega\tau$$

Active filters

- Low-pass filter

$$\frac{V_o(j\omega)}{V_i(j\omega)} = -\frac{Z_f}{Z_i} = -\frac{\dfrac{(R_f/j\omega C_f)}{[(1/j\omega C_f)+R_f]}}{R_i}$$

$$= \frac{R_f}{(1+j\omega R_f C_f)R_i} = -\frac{R_f}{R_i}\frac{1}{1+j\omega\tau}$$

- High-pass filter

$$\frac{V_o(j\omega)}{V_i(j\omega)} = -\frac{Z_f}{Z_i} = -\frac{R_f}{1/j\omega C_i + R_i}$$

$$= -\frac{j\omega R_f C_i}{1+j\omega C_i R_i} = -\frac{R_f}{R_i}\frac{j\omega\tau}{1+j\omega\tau}$$

- Bandpass filter

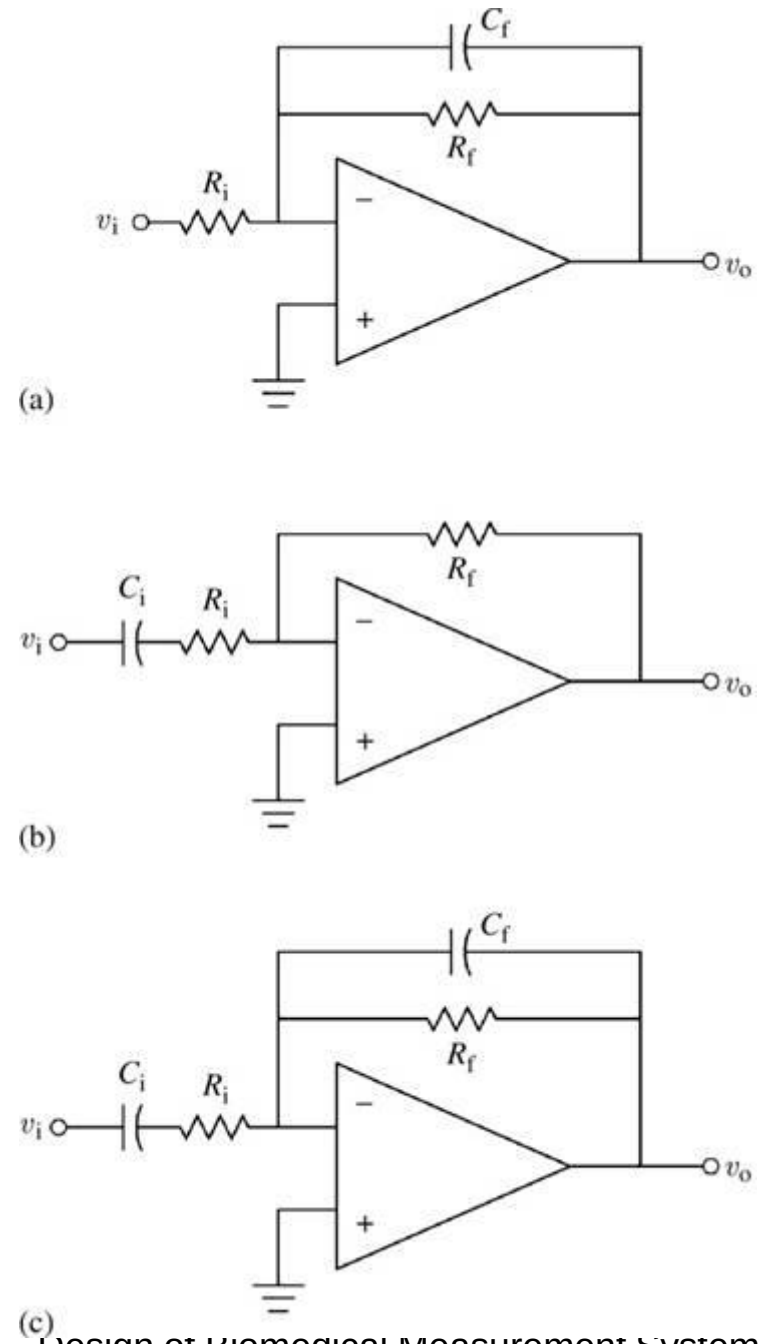

Frequency response

- Gain-bandwidth product

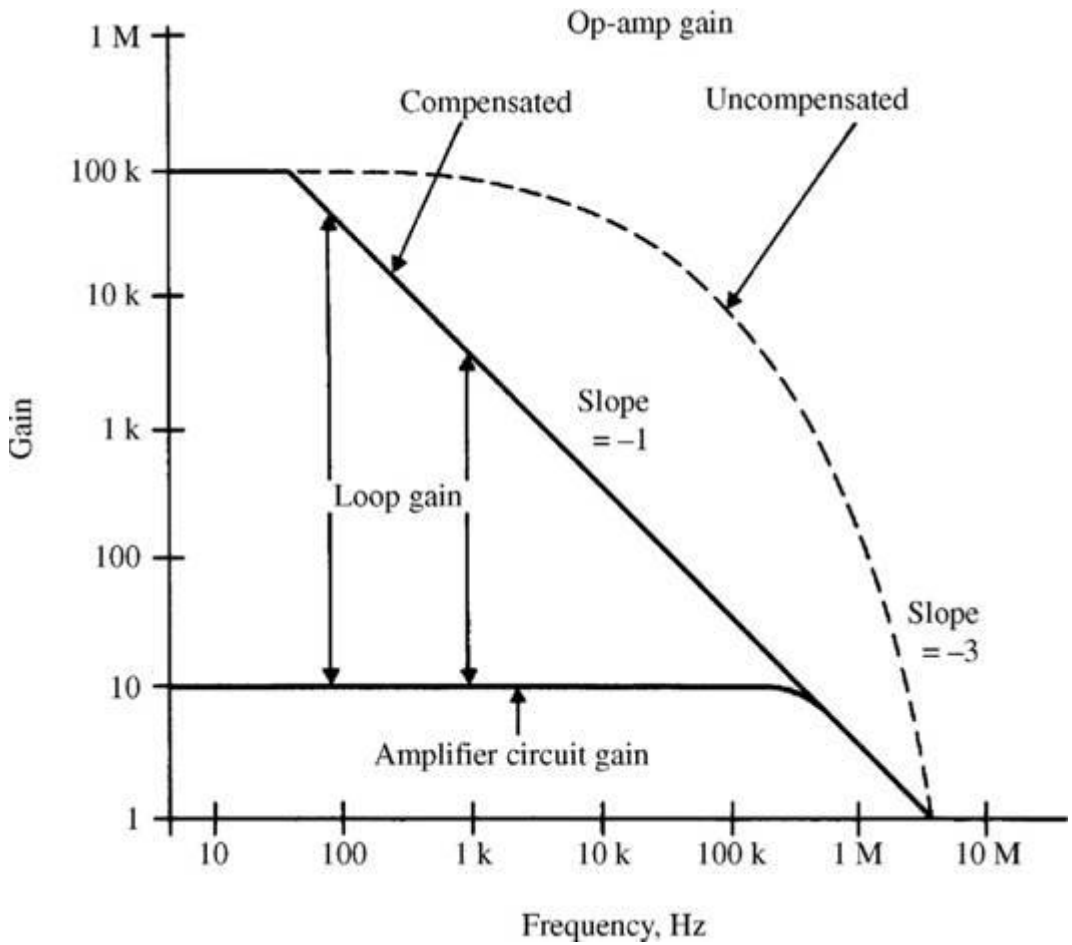

Bandwidth and Gain Tradeoff

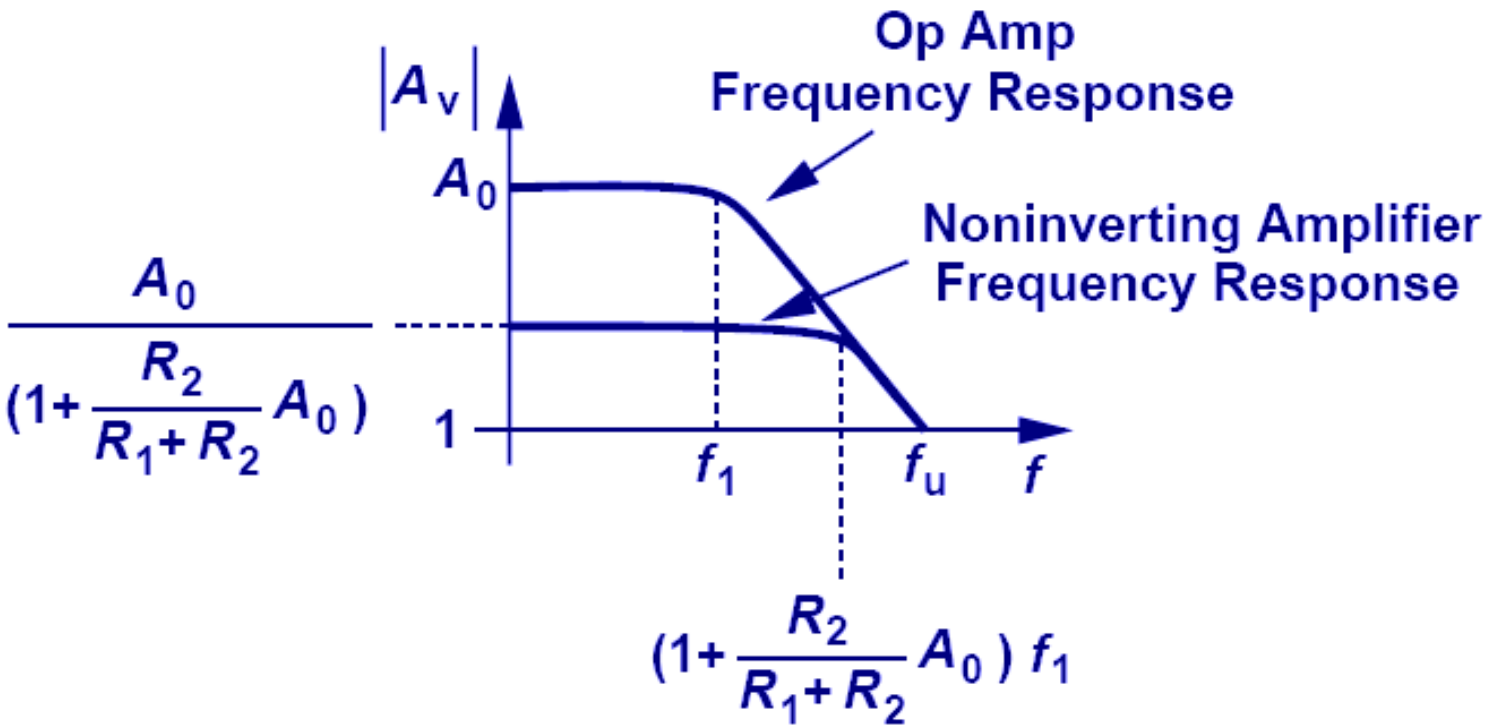

- Having a loop around the op amp (inverting, noninverting, etc) helps to increase its bandwidth. However, it also decreases the low frequency gain.

The content of this page is referred to **Fundamentals of Microelectronics** Behzad Razavi

DC offset

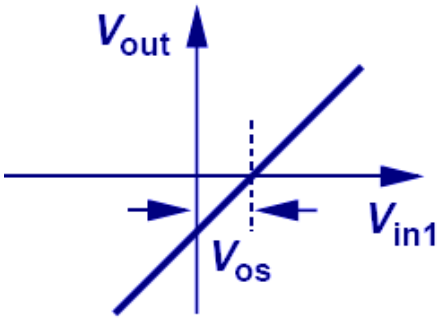

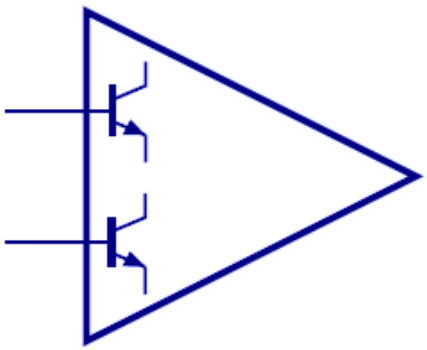

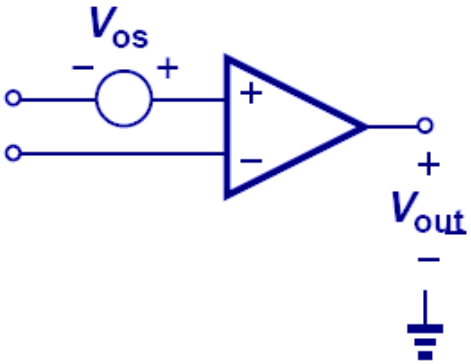

- Offsets in an op amp that arise from input stage mismatch cause the input-output characteristic to shift in either the positive or negative direction (the plot displays positive direction).

The content of this page is referred to **Fundamentals of Microelectronics** Behzad Razavi

Effects of DC Offsets

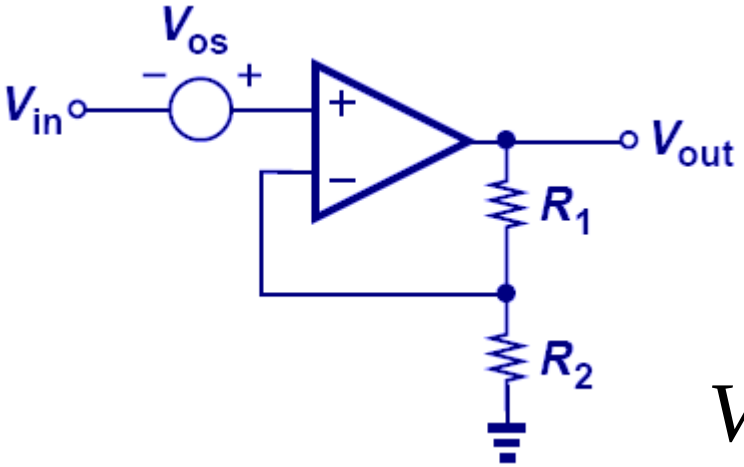

$$V_{out} = \left(1 + \frac{R_1}{R_2}\right)(V_{in} + V_{os})$$

- As it can be seen, the op amp amplifies the input as well as the offset, thus creating errors.

The content of this page is referred to **Fundamentals of Microelectronics** Behzad Razavi

Saturation due to DC offsets

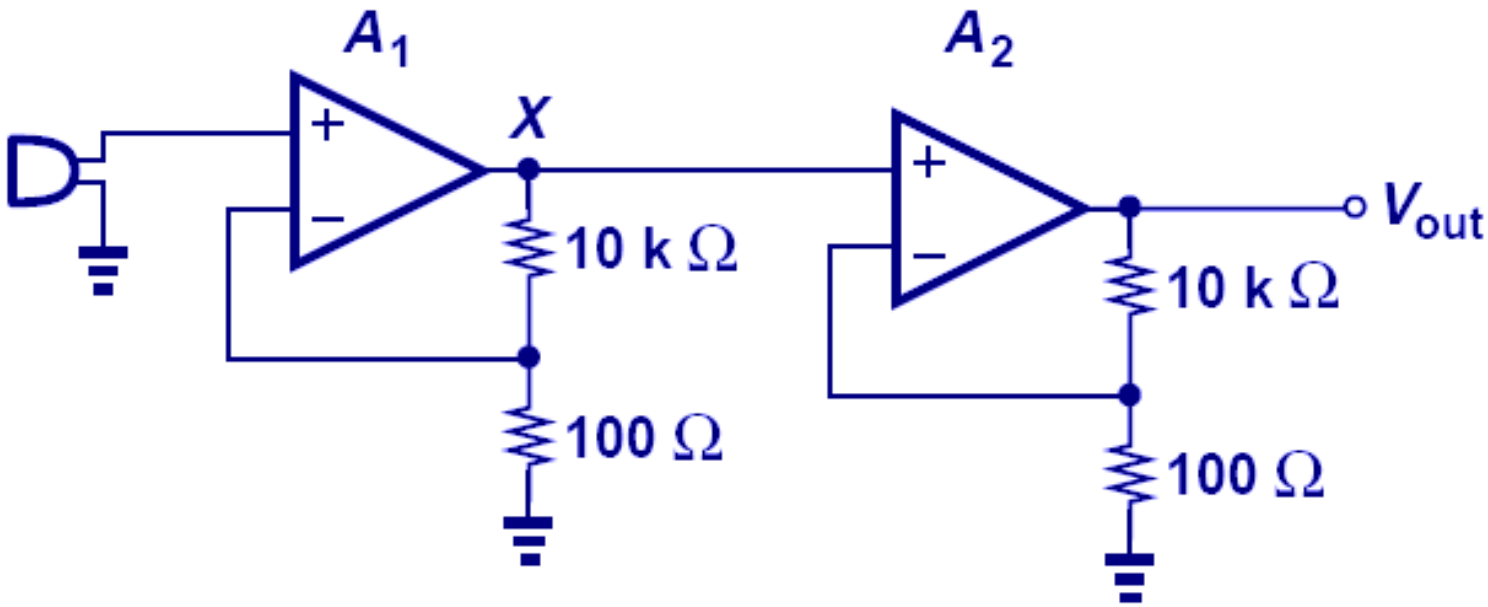

- Since the offset will be amplified just like the input signal, output of the first stage may drive the second stage into saturation.

The content of this page is referred to **Fundamentals of Microelectronics** Behzad Razavic

Offset in Integrator

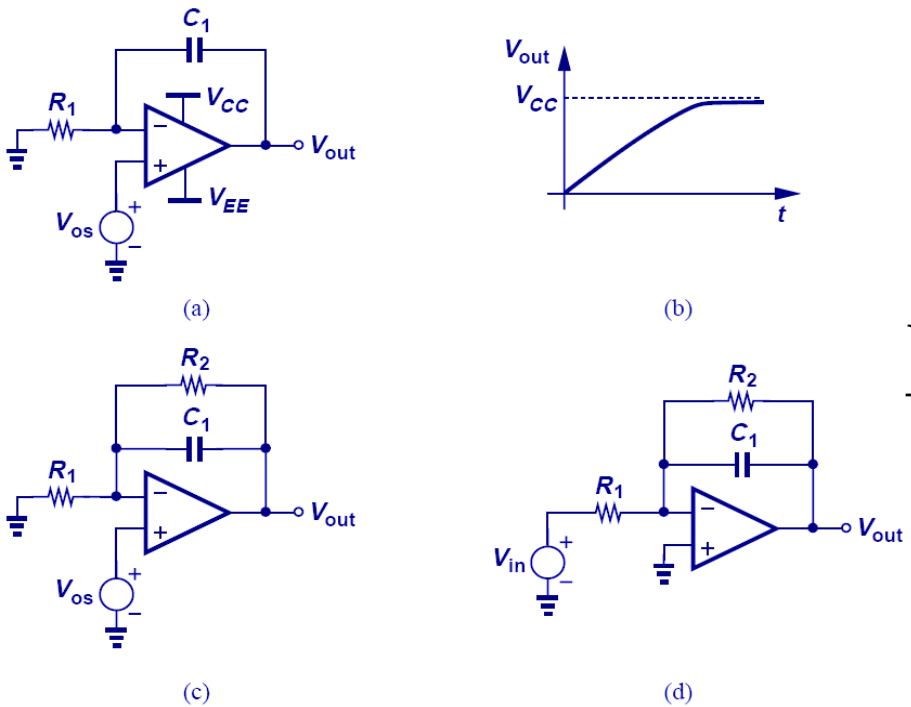

$$\frac{V_{out}}{V_{in}} = -\frac{R_2}{R_1}\frac{1}{R_2C_1s+1}$$

- A resistor can be placed in parallel with the capacitor to “absorb” the offset. However, this means the closed-loop transfer function no longer has a pole at origin.

The content of this page is referred to **Fundamentals of Microelectronics** Behzad Razavic

Input Bias Current

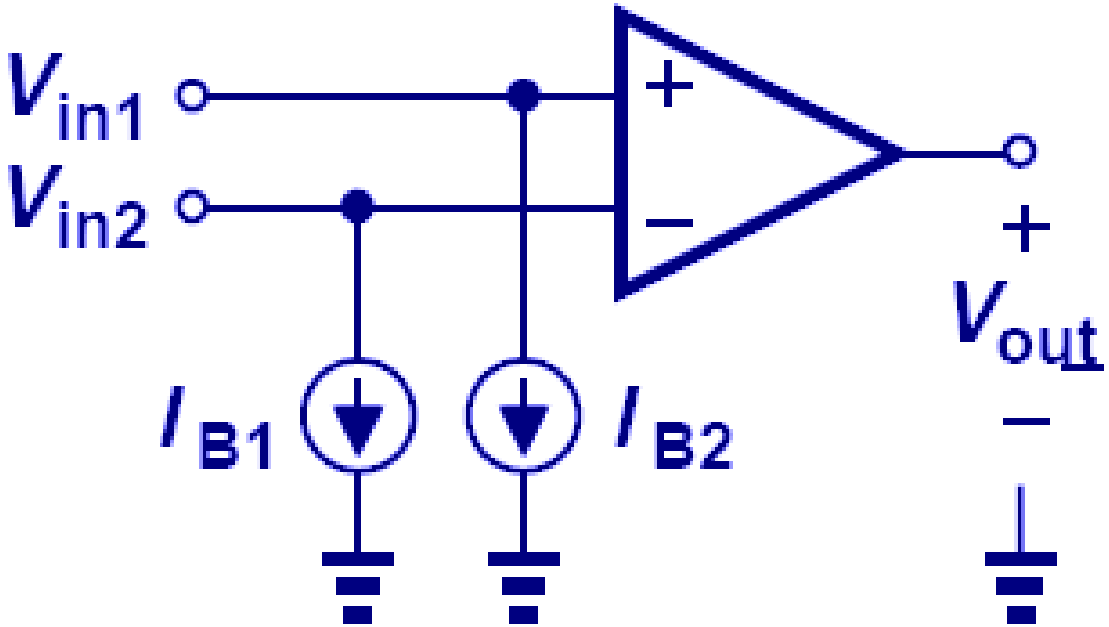

- The effect of bipolar base currents can be modeled as current sources tied from the input to ground.

The content of this page is referred to **Fundamentals of Microelectronics** Behzad Razavic

Effects of Input Bias Current on Noninverting Amplifier

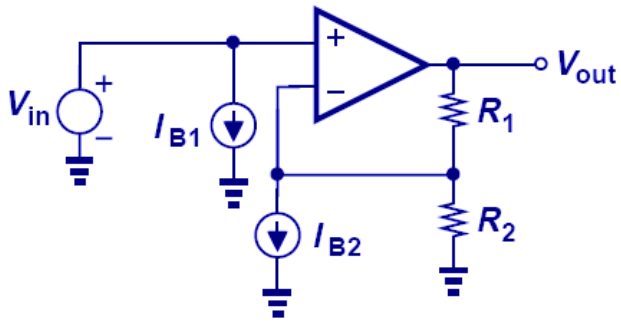

(a)

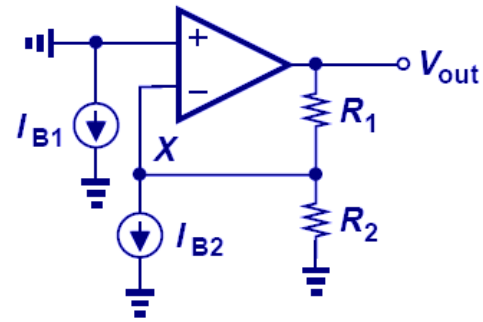

(b)

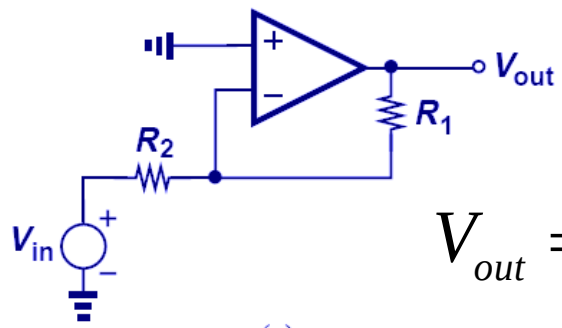

(c)

$$V_{out} = -R_2 I_{B2}\left(-\frac{R_1}{R_2}\right) = R_1 I_{B2}$$

- It turns out that I_{B1} has no effect on the output and I_{B2} affects the output by producing a voltage drop across R_1.

The content of this page is referred to **Fundamentals of Microelectronics** Behzad Razavic

Input Bias Current Cancellation

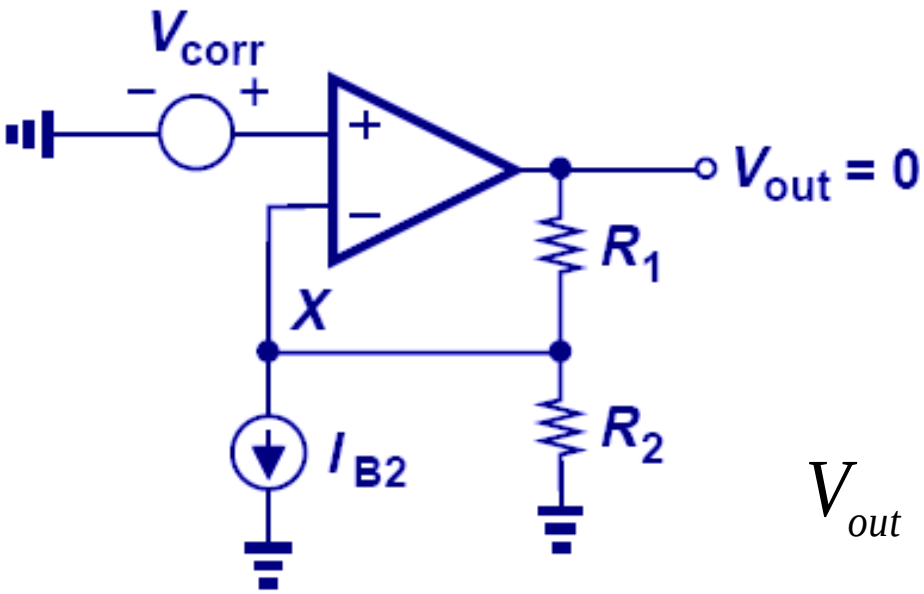

$$V_{out} = V_{corr}\left(1 + \frac{R_1}{R_2}\right) + I_{B2}R_1$$

- We can cancel the effect of input bias current by inserting a correction voltage in series with the positive terminal.
- In order to produce a zero output, $V_{corr} = -I_{B2}(R_1 || R_2)$.

The content of this page is referred to **Fundamentals of Microelectronics** Behzad Razavic

Input Bias Current Cancellation

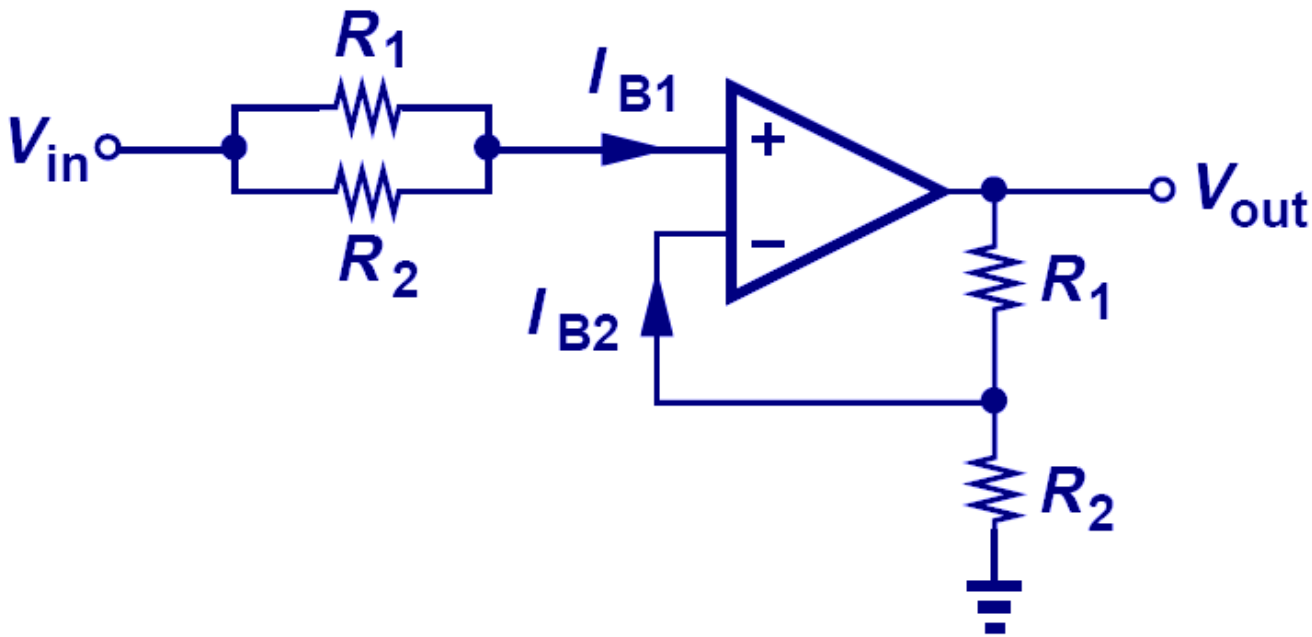

$$I_{B1} = I_{B2}$$

The content of this page is referred to **Fundamentals of Microelectronics** Behzad Razavic

Effects of Input Bias Currents on Integrator

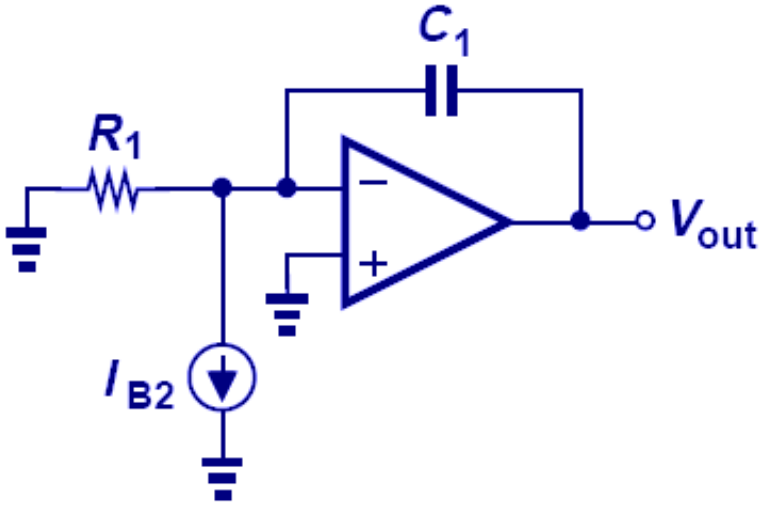

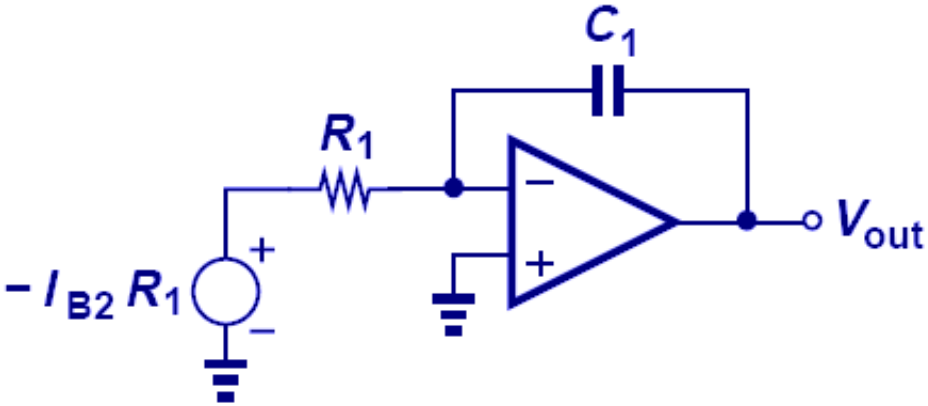

$$V_{out} = -\frac{1}{R_1 C_1}\int \left(-I_{B2} R_1\right) dt$$

- Input bias current will be integrated by the integrator and eventually saturate the amplifier.

The content of this page is referred to **Fundamentals of Microelectronics** Behzad Razavic

Integrator's Input Bias Current Cancellation

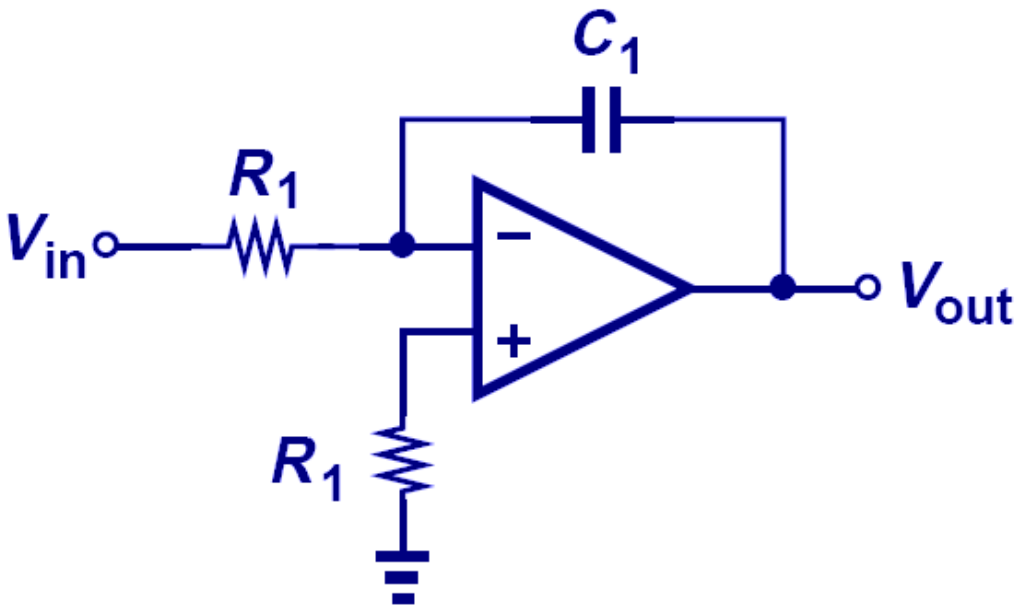

- By placing a resistor in series with the positive input, integrator input bias current can be cancelled.
- However, the output still saturates due to other effects such as input mismatch, etc.

The content of this page is referred to **Fundamentals of Microelectronics** Behzad Razavic

Slew Rate of Op Amp

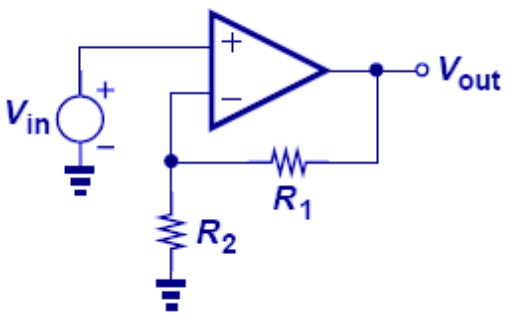

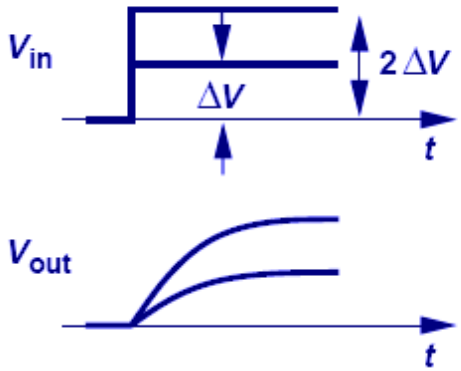

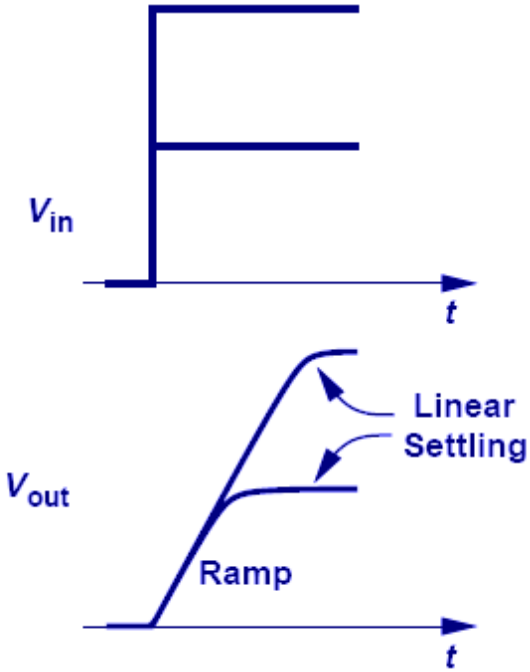

- In the linear region, when the input doubles, the output and the output slope also double. However, when the input is large, the op amp slews so the output slope is fixed by a constant current source charging a capacitor.
- This further limits the speed of the op amp.

The content of this page is referred to **Fundamentals of Microelectronics** Behzad Razavic

Input and output resistance

- Input resistance

$$\Delta v_o = A\Delta v_d = A(\Delta v_i - \Delta v_o)$$
$$= \frac{A\Delta v_i}{A+1}$$
$$\Delta i_i = \frac{\Delta v_d}{R_d} = \frac{\Delta v_i - \Delta v_o}{R_d} = \frac{\Delta v_i}{(A+1)R_d}$$
$$R_{ai} = \frac{\Delta v_i}{\Delta i_i} = (A+1)R_d \cong AR_d$$

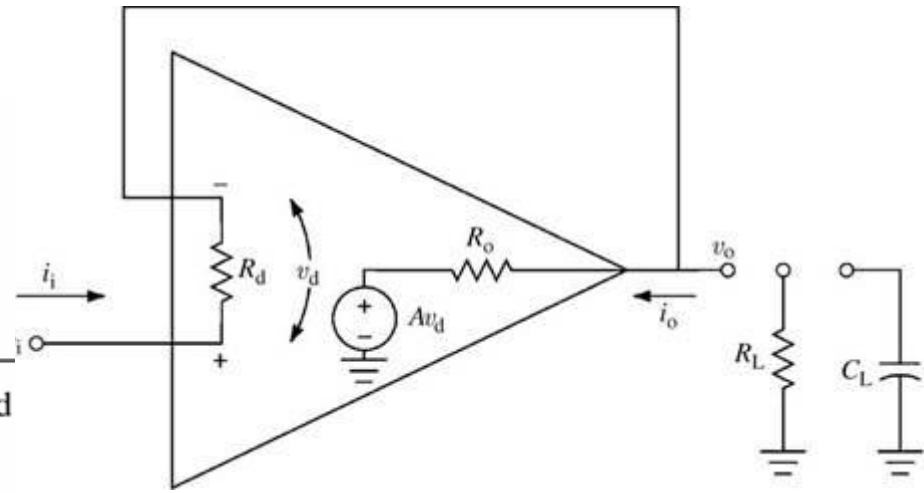

Inverting amplifier: $$R_{ai} = \frac{\Delta v_i}{\Delta i_i} = R_i$$

- Output resistance

$$-\Delta v_d = \Delta v_o = A\Delta v_d + \Delta i_o R_o = -A\Delta v_o + \Delta i_o R_o$$
$$(A+1)\Delta v_o = \Delta i_o R_o$$
$$R_{ao} = \frac{\Delta v_o}{\Delta i_o} = \frac{R_o}{A+1} \cong R_o/A$$

Heart rate detection

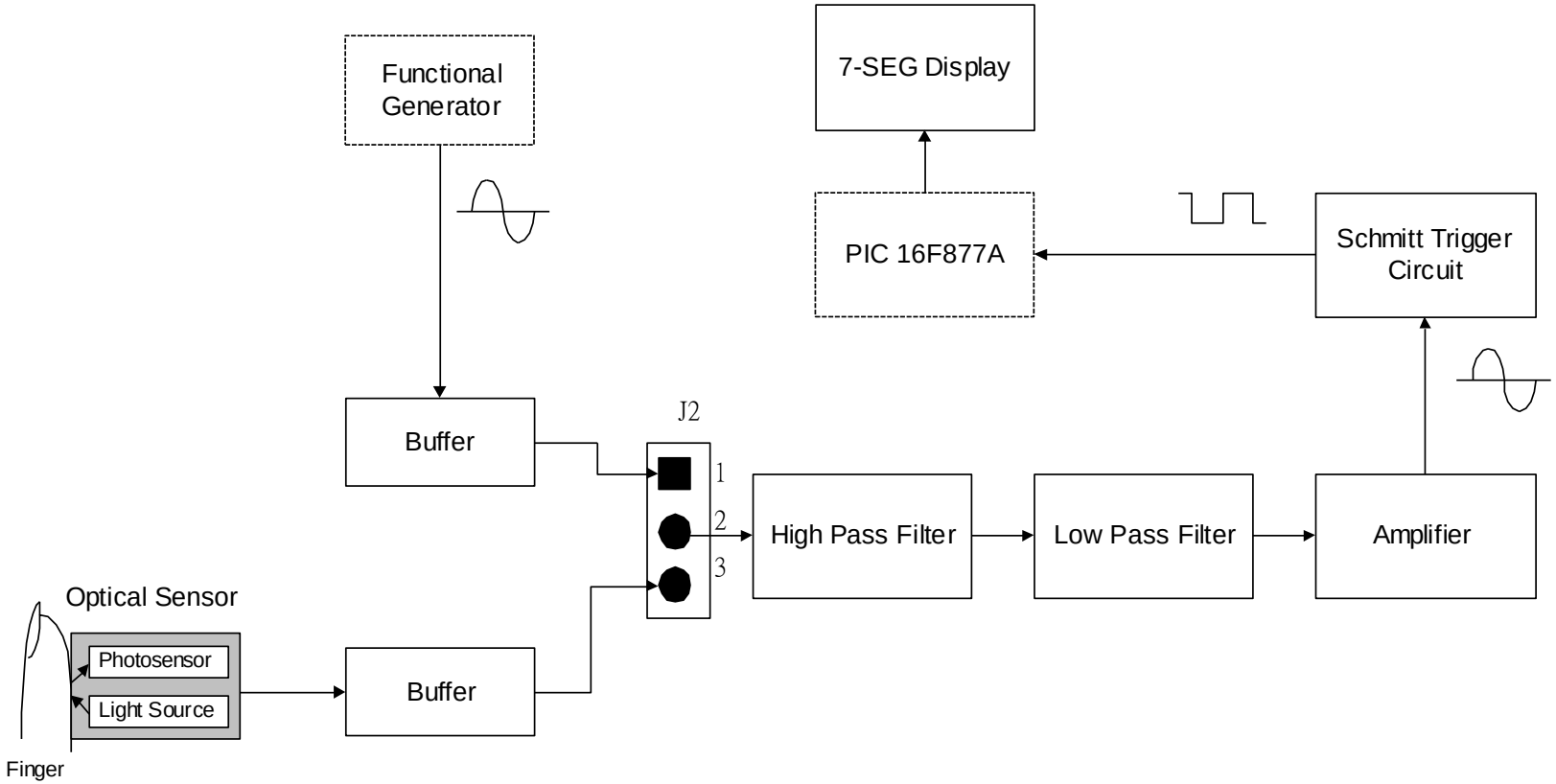

Schematics

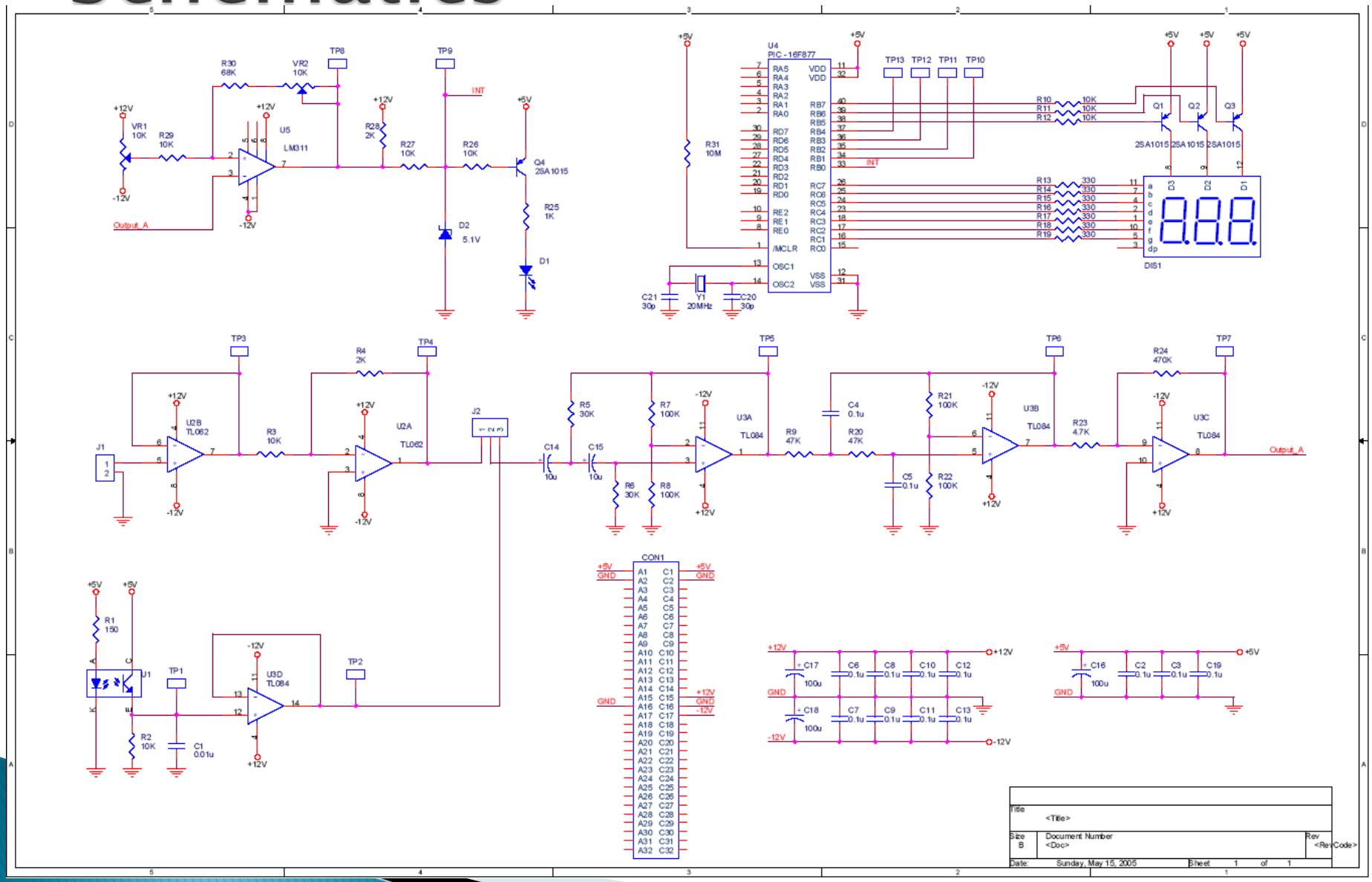
U4
PIC - 16F877
U5
LM311
U2B
TL062
U2A
TL062
U3A
TL084
U3B
TL084
U3C
TL084
U3D
TL084
DIS1
CON1
Output_A
INT

PCB board

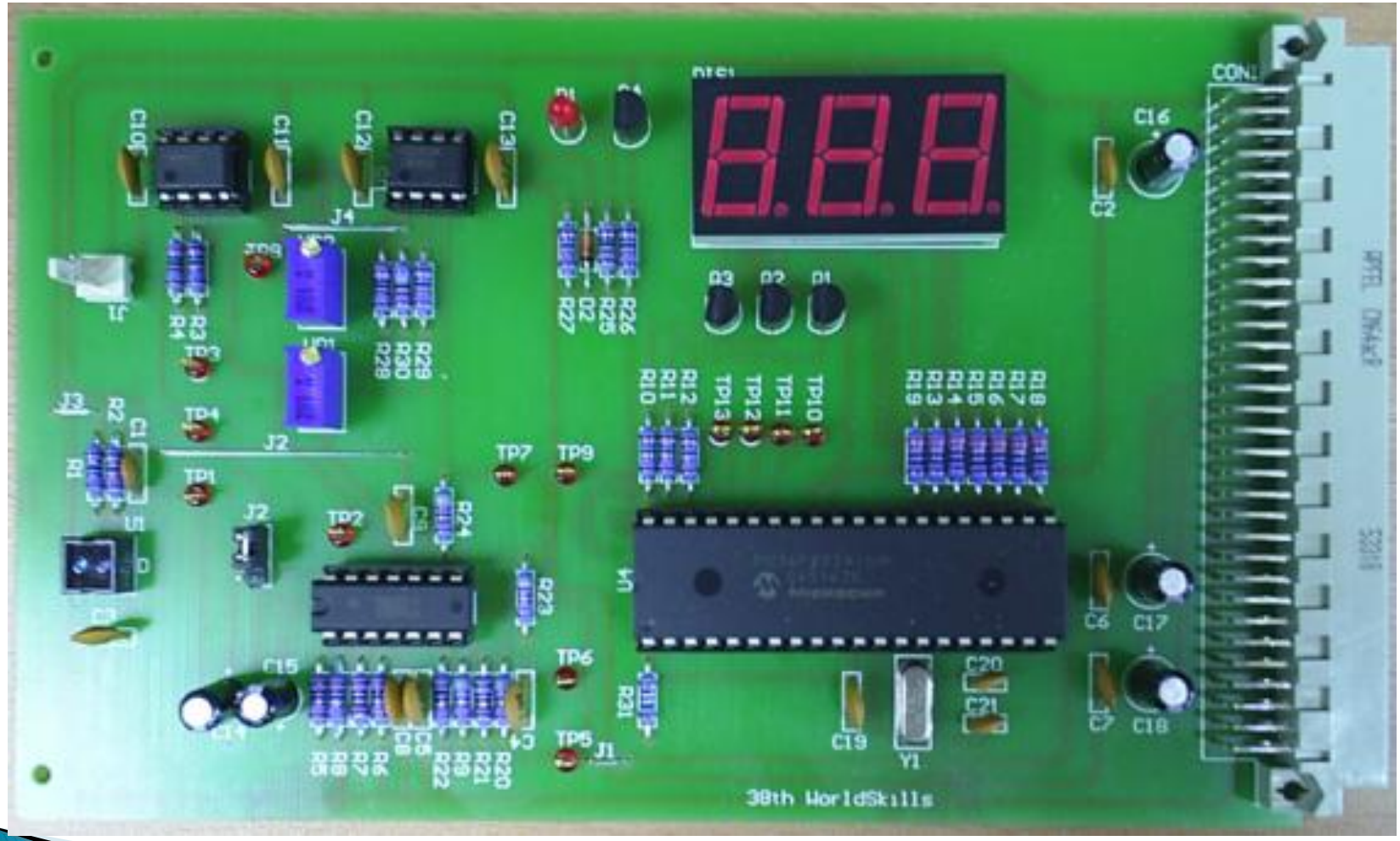

Functional test

- 電供應器輸出 +5V, +12V 和-12V, 然後輸入到電路中。
- 檢查各元件的電源電壓正確。
- 調整信號產生器輸出一2Hz，峰值為100mV的正弦波信號輸入到J1 connector。
- 用jumper 將J2的pin 1 和pin 2 短路。
- 調整VR1和VR2, 參照下圖使得$V_U = 1.9 \pm 0.1V$, $V_D = -1.55 \pm 0.1V$。

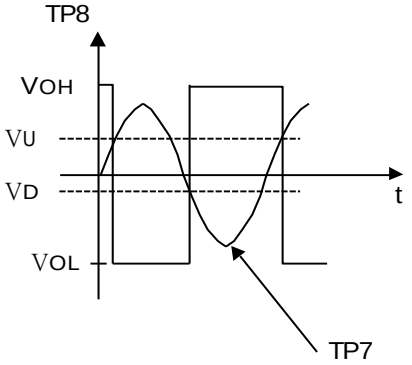

- TP8應該輸出一脈波。
- 七段顯示器應該顯示“120”，並且LED (D1) 會閃爍且閃爍頻率同輸入信號頻率。

TP2 and TP6

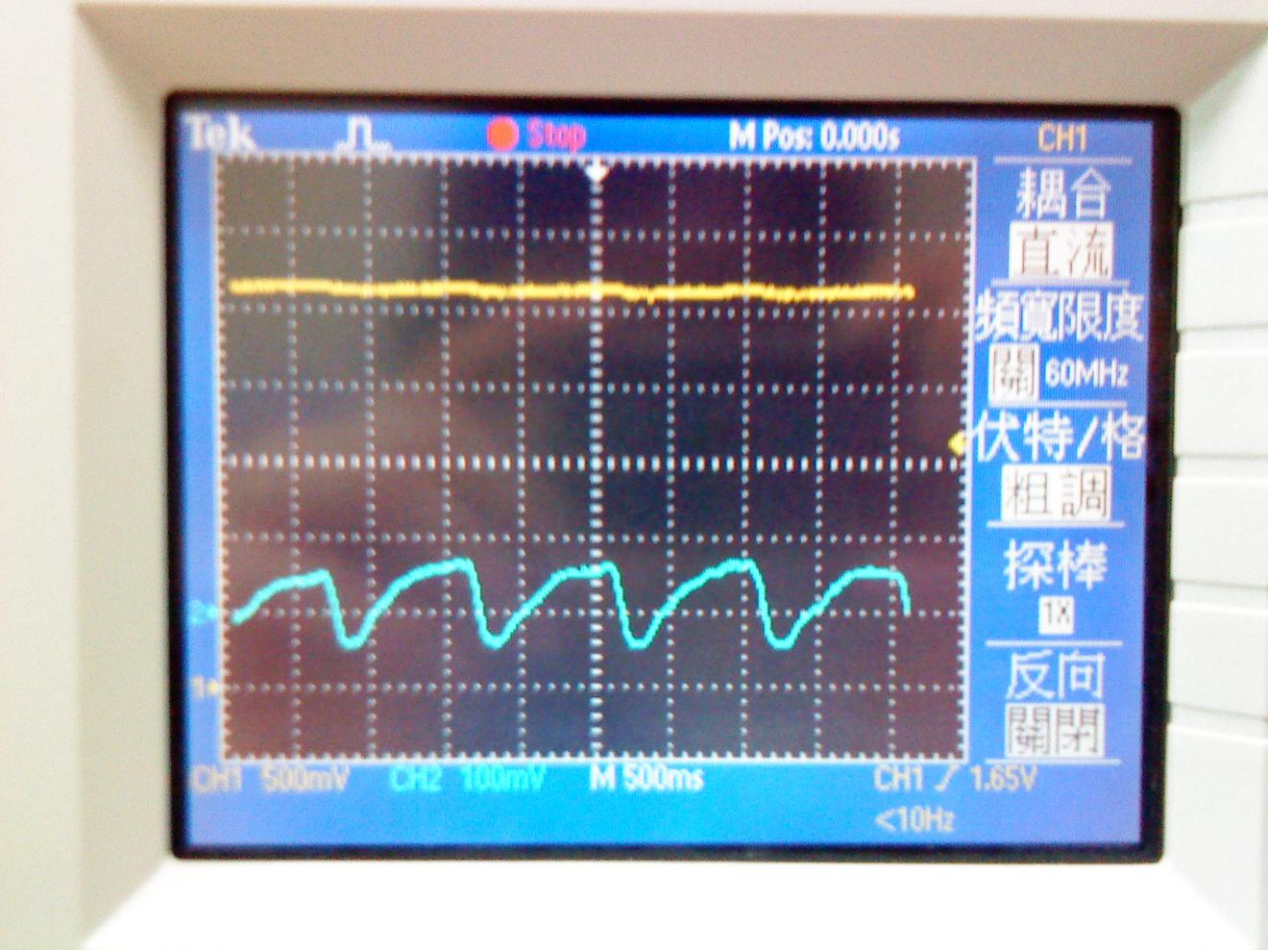
Tek
Stop
M Pos: 0.000s
CH1
耦合
直流
頻寬限度
關 60MHz
伏特/格
粗調
探棒
1X
反向
關閉
CH1 500mV
CH2 100mV
M 500ms
CH1 ∕ 1.65V
<10Hz

TP7 and TP8

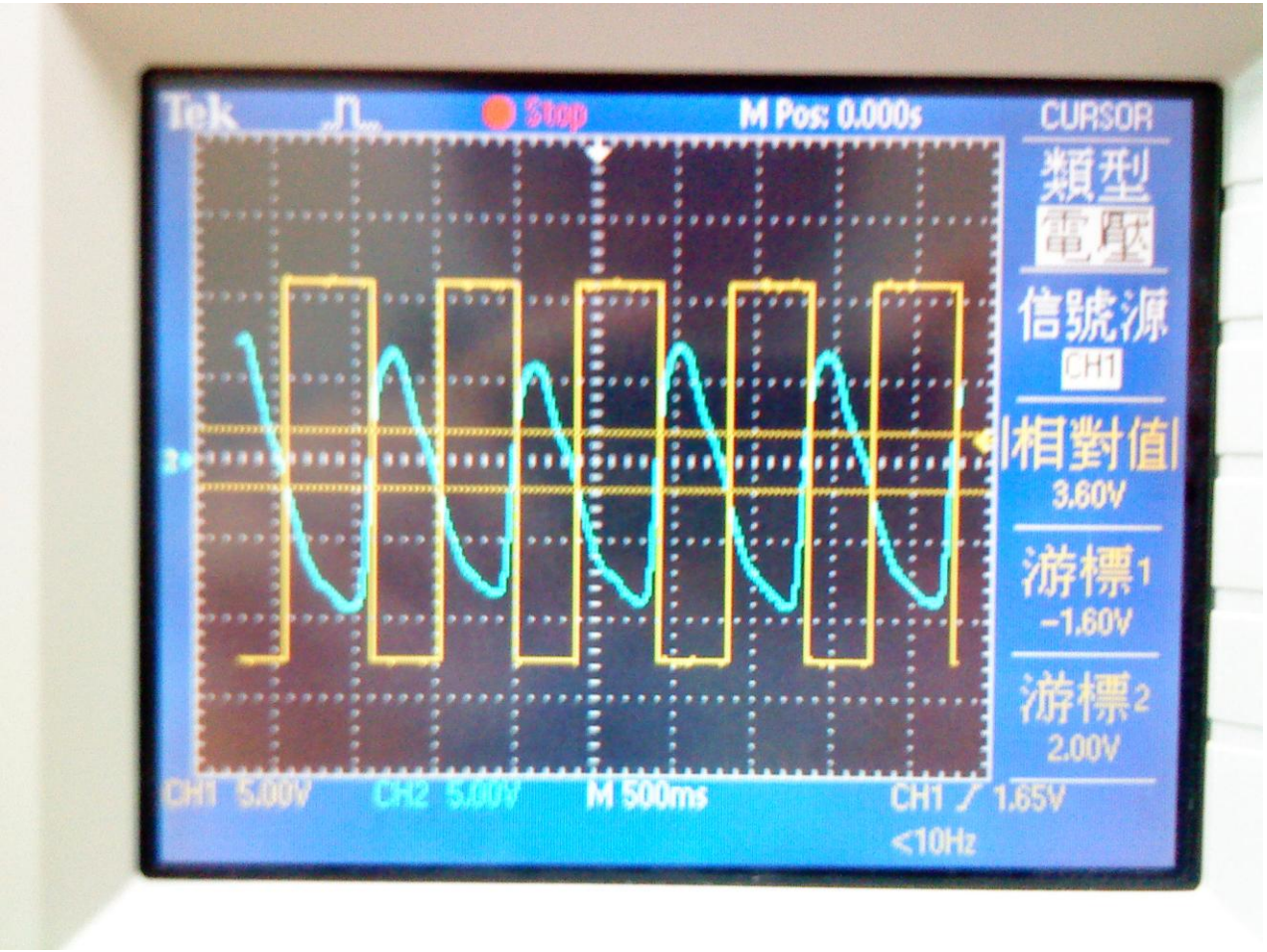
Tek
Stop
M Pos: 0.000s
CURSOR
類型
電壓
信號源
CH1
相對值
3.60V
游標1
-1.60V
游標2
2.00V
CH1 5.00V
CH2 5.00V
M 500ms
CH1 ∕ 1.65V
<10Hz

CNY70

- Reflective Optical Sensor with Transistor Output
- The operating wavelength is 950 nm

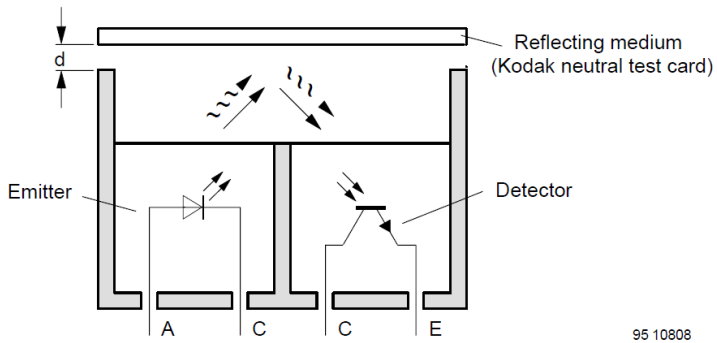

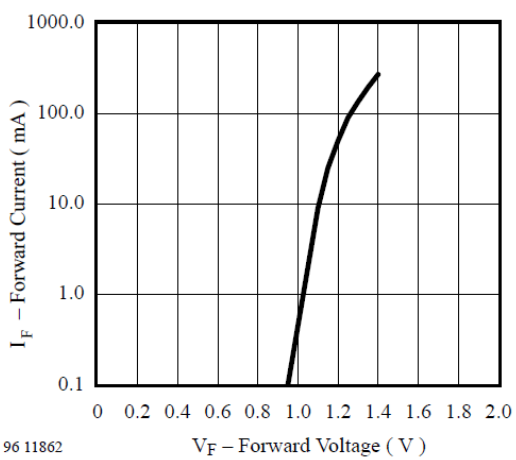

Figure 3. Forward Current vs. Forward Voltage

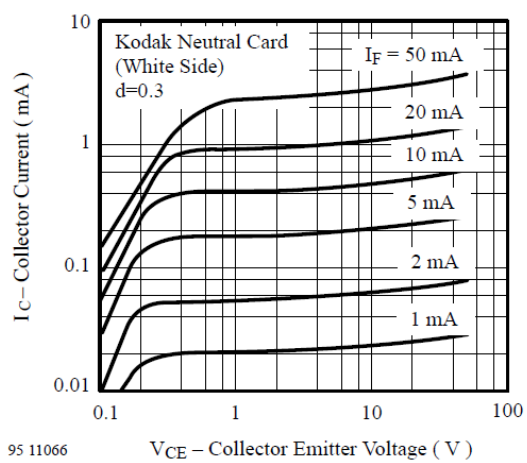

Figure 6. Collector Current vs. Collector Emitter Voltage

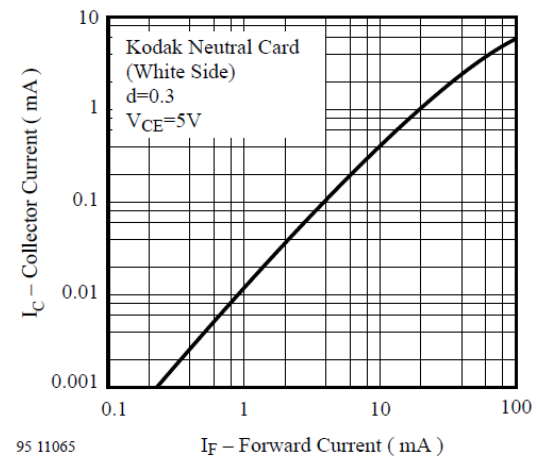

Figure 5. Collector Current vs. Forward Current

Frequency and period measurement

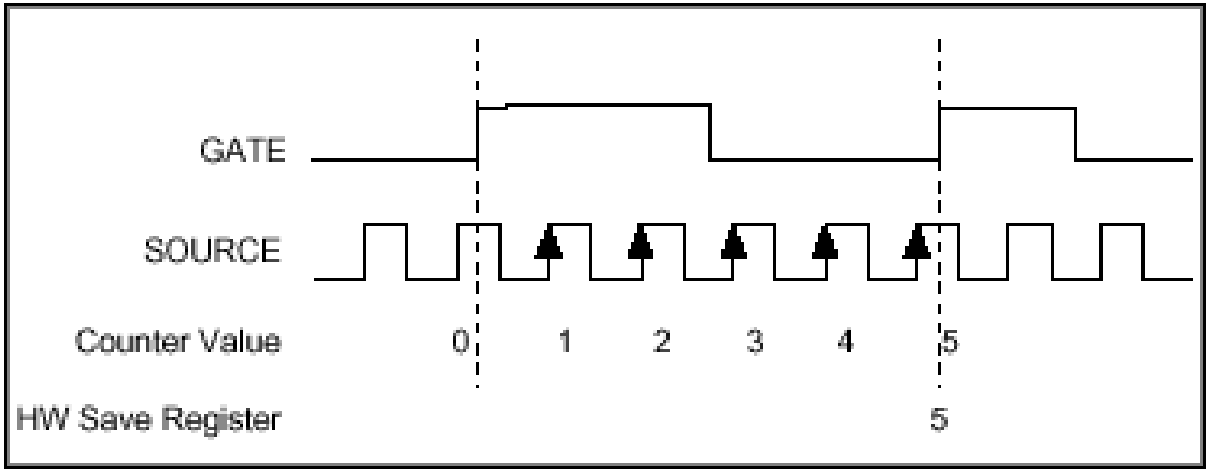

•The pulse period is the number of counts between rising edges divided by the number of counts expected in one second (frequency of the known clock), that is, period = counts / frequency.

Duty cycle

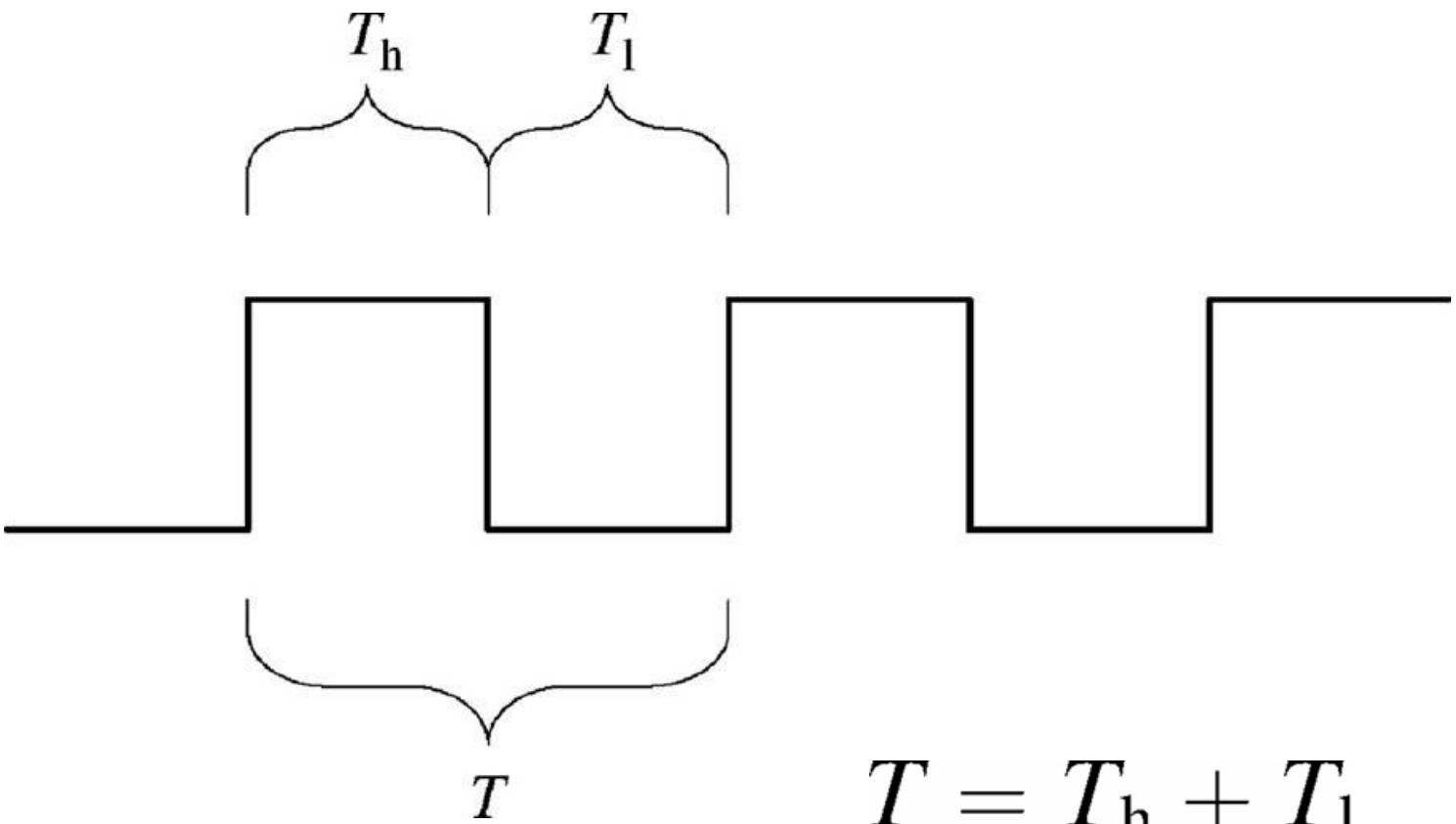

$$T = T_h + T_l$$

$$\text{Duty cycle} = \frac{T_h}{T} \times (100\%)$$

555 timer

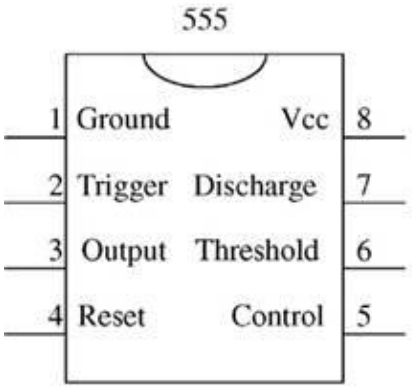

(a)

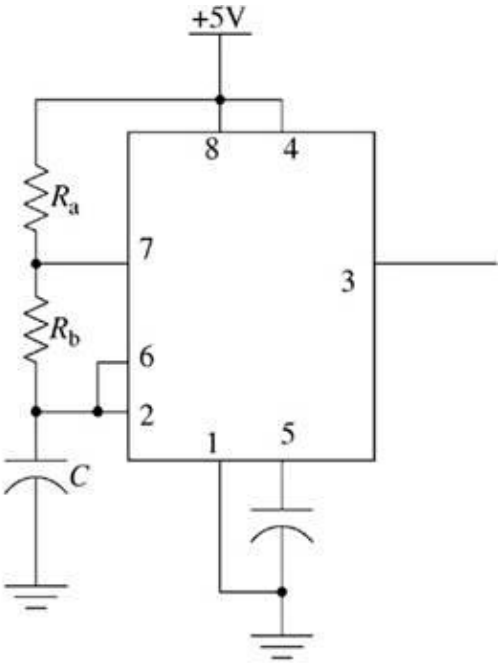

(b)

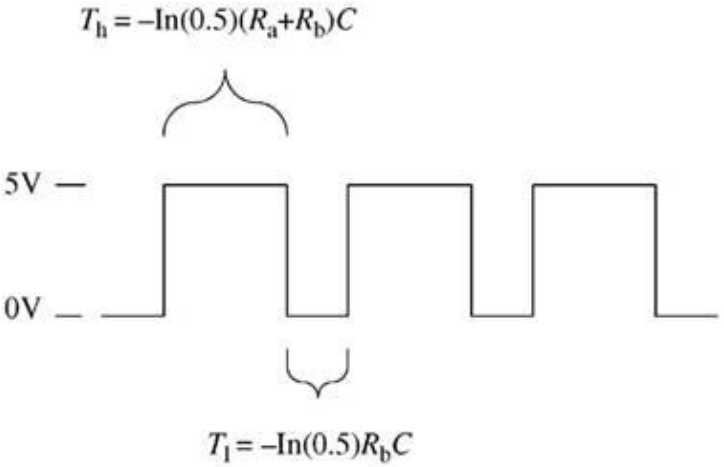

(c)

Distance meter

- D i s t a n z – Sensor
  - DT 10
- Iout=4 ... 20 mA
  - 50 mm ... 500 mm

Block diagram

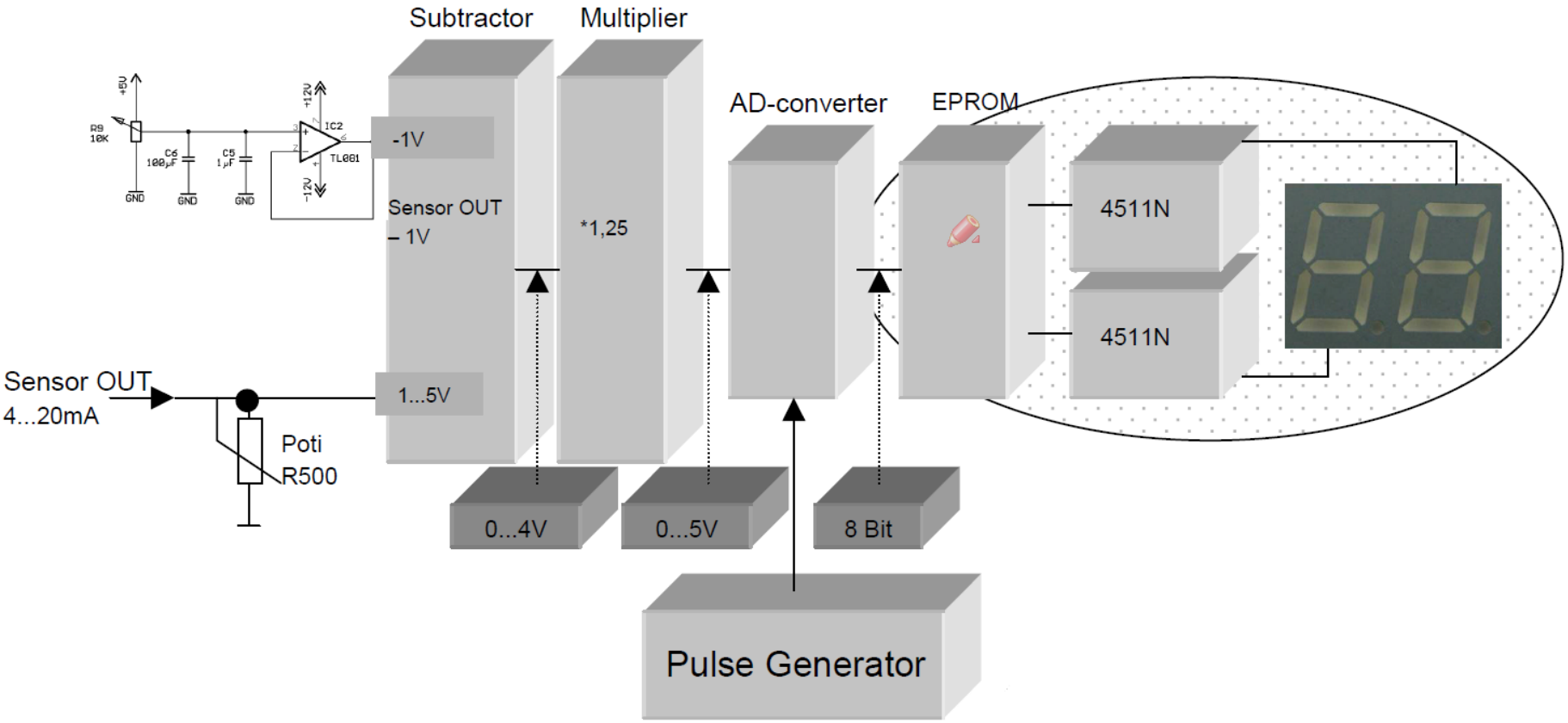

Analog circuits

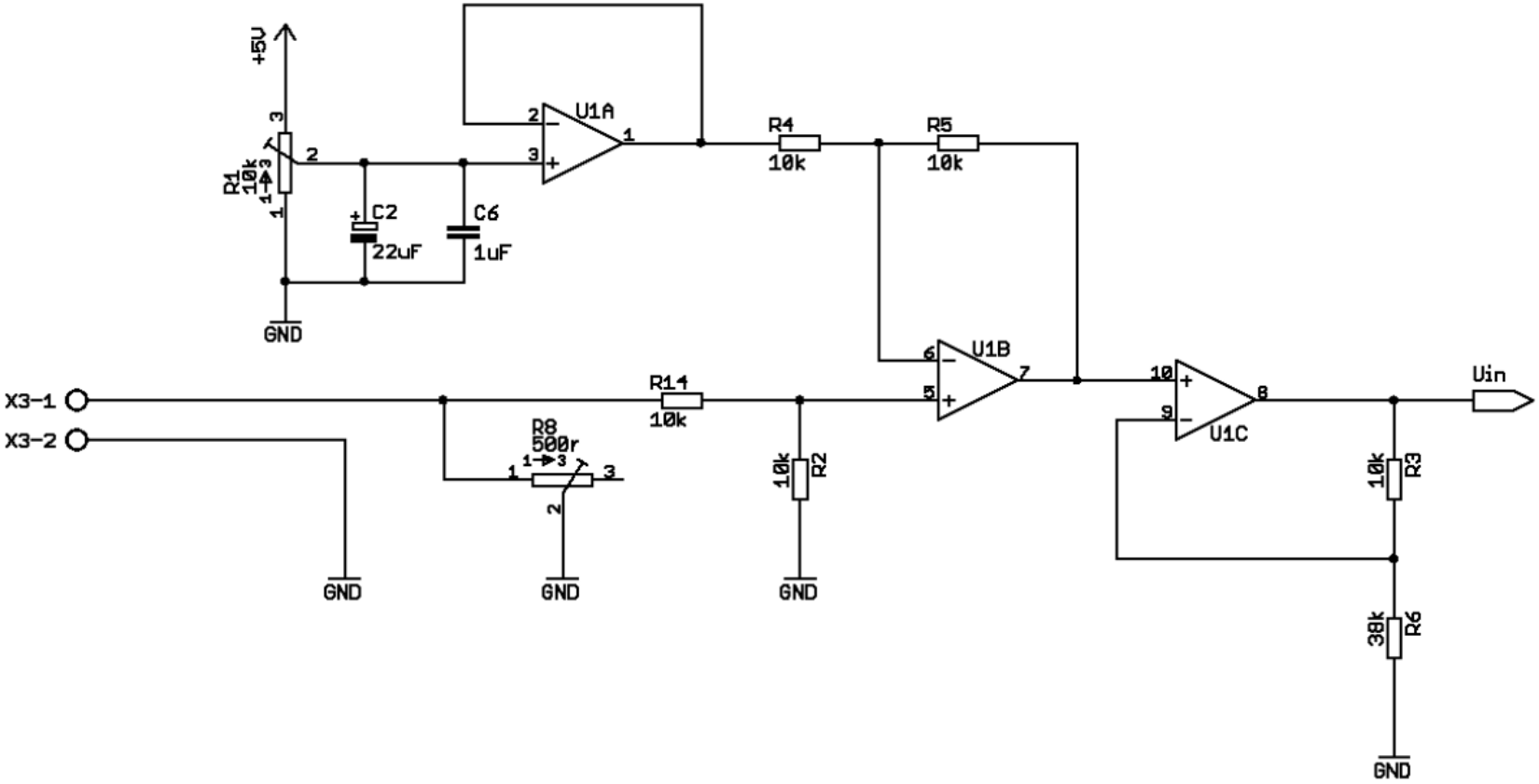

ADC and EPROM

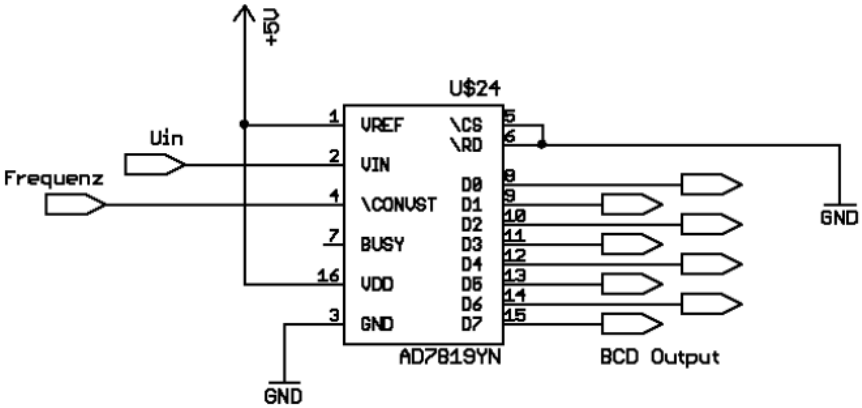

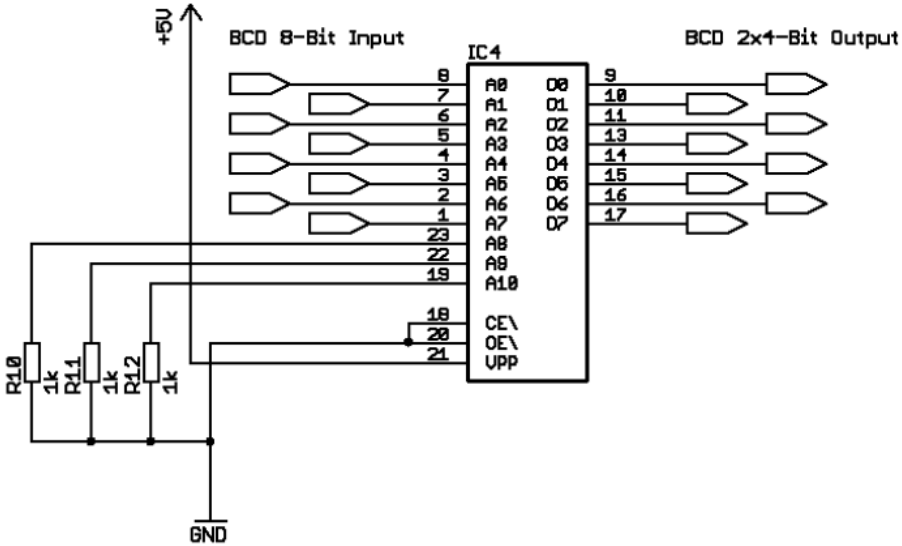

AD7819 timing

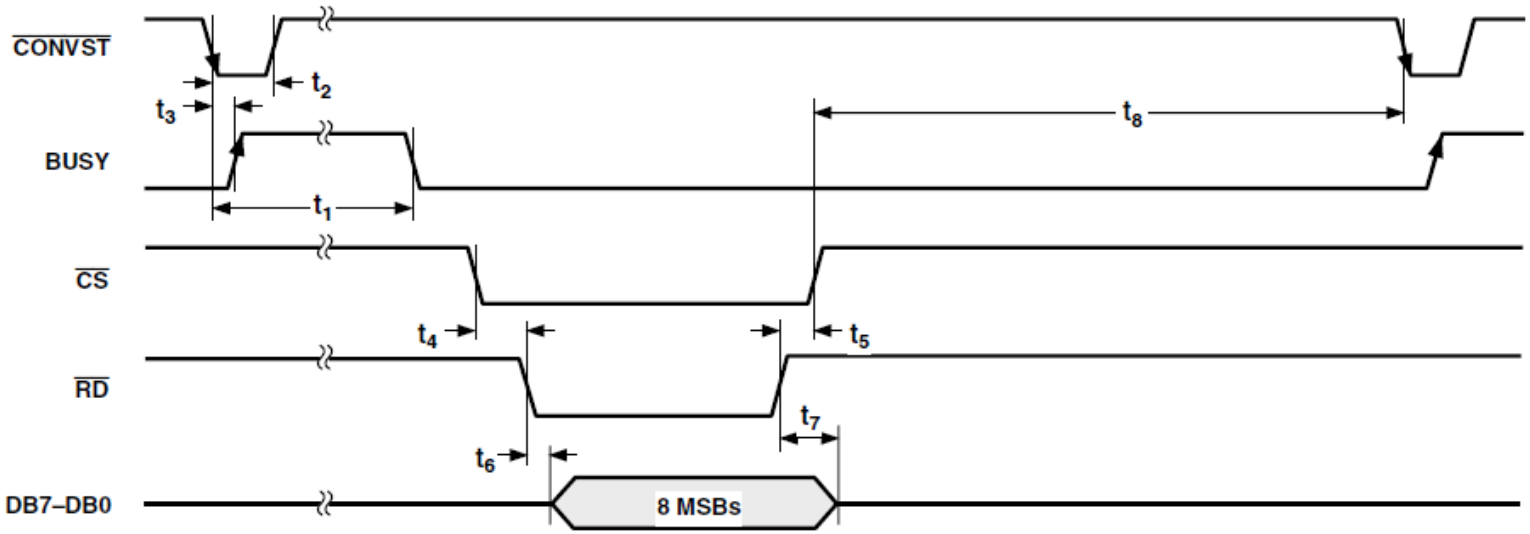

Figure 15. Parallel Port Timing

AD7819 Transfer Characteristic

- Analog Input Range: 0 V to VREF
- Reference Input Range: 1.2 V to VDD

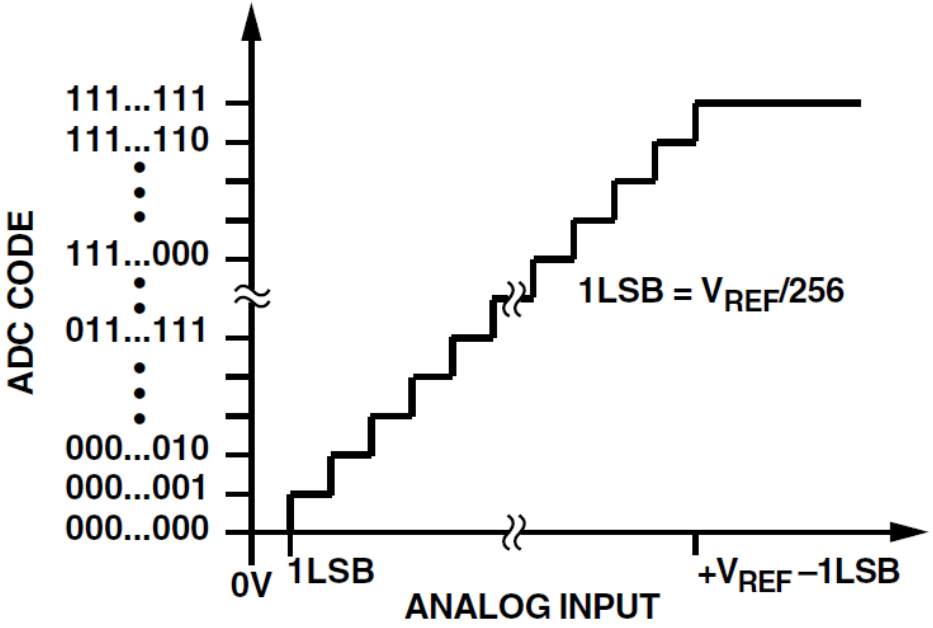

Figure 7. Transfer Characteristic

EPROM content

ADR:	00	01	02	03	04	05	06	07	08	09	0A	0B	0C	0D	0E	0F
000000	05	05	05	06	06	06	06	06	06	07	07	07	07	07	07	08
000010	08	08	08	08	09	09	09	09	09	09	10	10	10	10	10	10
000020	11	11	11	11	11	11	12	12	12	12	12	12	13	13	13	13
000030	13	13	14	14	14	14	14	14	15	15	15	15	15	15	16	16
000040	16	16	16	16	17	17	17	17	17	18	18	18	18	18	18	19
000050	19	19	19	19	19	20	20	20	20	20	21	21	21	21	22	22
000060	22	22	22	22	23	23	23	23	23	24	24	24	24	24	24	25
000070	25	25	25	25	25	26	26	26	26	26	27	27	27	27	27	27
000080	28	28	28	28	28	28	29	29	29	29	29	30	30	30	30	30
000090	30	31	31	31	31	31	31	32	32	32	32	32	33	33	33	33
0000A0	33	33	34	34	34	34	34	34	35	35	35	35	35	36	36	36
0000B0	36	36	36	37	37	37	37	37	37	38	38	38	38	38	39	39
0000C0	39	39	39	39	40	40	40	40	40	40	41	41	41	41	41	42
0000D0	42	42	42	42	42	43	43	43	43	43	43	44	44	44	44	44
0000E0	45	45	45	45	45	45	46	46	46	46	46	46	47	47	47	47
0000F0	47	48	48	48	48	48	48	49	49	49	49	49	49	50	50	50
000100	FF	FF	FF	FF	FF	FF	FF	FF	FF	FF	FF	FF	FF	FF	FF	FF

Filter Design

- Circuit simulation
  - Orcad PSPICE
  - Altium Designer
- Design tools
  - Microchip-FilterLab

Homework 1

- 1. Heart detection board
  - 調整信號產生器輸出一2Hz，峰值為100mV的正弦波信號輸入到J1 connector。
  - 用jumper 將J2的pin 1 和pin 2 短路。
  - 調整VR1和VR2, 參照下圖使得$V_U = 1.9 \pm 0.1V$, $V_D = -1.55 \pm 0.1V$。
  - 請畫出2 cycles 的TP3, TP7, TP8, TP9和TP11的波形(請標示清楚時間、電壓)。
  - TP4和TP5間的低頻截止頻率f_L和高頻截止頻率f_H。
  - TP5和TP6間的f_L和f_H。
  - TP4和TP6間的頻寬BW。
  - 計算TP12的工作週期(duty cycle of the TP12 output)。

Homework 1
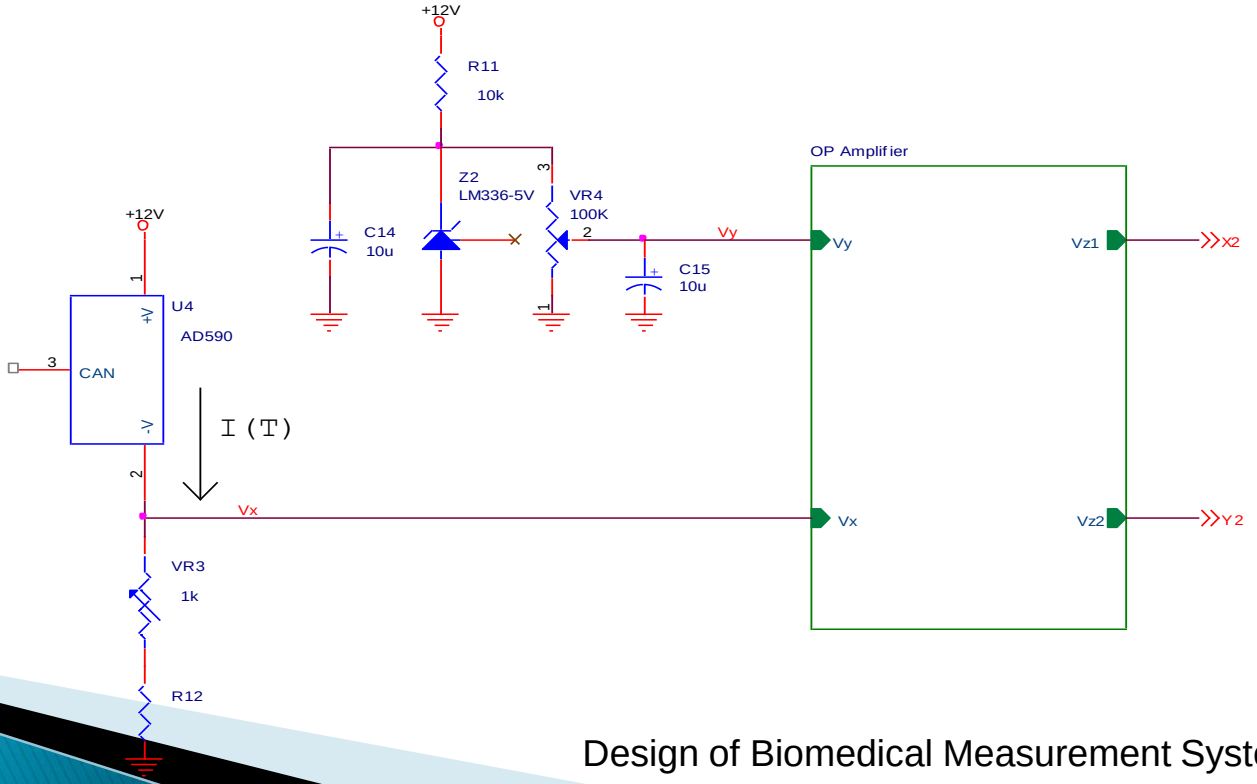
- 2. 設電流型溫度感測器AD590的電流輸出為線性，電流輸出與溫度變化的關係為I(T)=273.15+T(μA)，T為溫度(單位°C)。請設計一感測電路，使溫度量測範圍為0-100°C。
  - 設計I/V電路中的R12，使Vx = I(T)×10KΩ。
  - 設計一OP Amplifier電路，使Vz=T×10mV，Vz=Vz1-Vz2。
  - 每個方塊設計必須有設計過程，並繪出所設計之電路圖。